# POWER SUPPLIES FOR SIDEBAND

## ABOUT POWER SUPPLIES

another • Ham News first

From January-February, 1954

**Here, for the first time, is a revealing discussion of how transient oscillations in the conventional power supply filter spoil the performance of an otherwise good rig—and what can be done to correct the difficulty.**

What is dynamic regulation in a power supply? Because the literature in this field is exceedingly sparse, perhaps a good way to start is to take two common definitions and directly relate them to the subject at hand, thus:

*Static*—Relating to forces in equilibrium (as d-c plate voltage and current in a rig transmitting a continuous unmodulated carrier).

*Dynamic*—Relating to moving forces (as d-c plate voltage and current under typical operating conditions in the average amateur CW, AM or SSB rig).

Keeping these definitions in mind will help in understanding just what goes on inside the conventional plate power supply which ordinarily consists of a center-tapped step-up transformer, rectifier tubes, and a two-section choke-input filter to reduce ripple. Since such supplies have been used since the introduction of the mercury-vapor rectifier, one might think that just about all the "bugs" would have been smoked out by now. Well, many bugs have been eliminated and, as a consequence, manufacturers of transformers and chokes now proudly offer what they term "matched power supplies"—sets of components for which they publish ratings, voltage regulation curves, and ripple output to be expected. These "matched" components make up power supplies that do perform as the published data indicates.

### LOSS OF VOLTAGE

However, poor ***dynamic*** regulation in these conventional power supplies means distortion of signal output—alteration of actual radiated intelligence—almost without exception in CW, AM and SSB rigs. These faults exist no matter how good a ***static*** regulation figure is indicated by d-c input instrumentation. This comes about in the conventional power supply because transient oscillations excited in the filter rob the rig of voltage during a sizable portion of the time it is sorely needed. Hams who light-heartedly pass this effect off as "instantaneous," thereby implying it is of no consequence, may want to examine their power supplies more critically after studying the test data presented below.

Consider the meaning of the voltage regulation curve usually given for the ordinary rectifier-filter combination. This is a "static" curve, obtained by loading the supply to certain currents, reading the voltages across each load, and then plotting the results. Such a curve is useful, but it tells us only what the ***average*** voltage will be at any ***average*** current value—***because the instruments used to measure these values respond only to average quantities.*** Figure 1 shows just such an acceptably good regulation curve in which the voltage drops about 10% or so from no load to full load on an ***average*** basis.

But is it the average load, voltage and current alone that we are interested in? What kind of loads do our amateur transmitters present to their respective power supplies? Do we transmit intelligence with average loads—or with a complex pattern of instantaneous loads?

### VOLTMETERS MISLEADING

Consider the final stage of a CW transmitter. At key-up the load is zero, or, at most, a rather small one. When the key is closed, the maximum load current is drawn. Now does the power supply follow the same curve that was plotted under static or slowly varying loads? An ordinary voltmeter might lead one to think so.

But look at Figure 2! This is a photograph of a cathode-ray oscilloscope which shows how the voltage varies with time in the ordinary power supply when the load is suddenly applied as in keying a CW rig. The solid upper line shows the no-load output of the supply—820 volts; the lower solid line represents zero volts. The lower waving line is a 60-cycle timing wave which permits reading the actual load voltage (represented by the upper oscillating line) at any fraction of a second from the instant the load was applied. The spot on the oscilloscope was started as the key closed to a 200-milliampere load. (The steady current rating on the test supply is 250 milliamperes.)

Note how the load voltage dips suddenly to less than a third of the no-load voltage line, then wildly overshoots the line and oscillates about until it finally settles down to the average loaded voltage of 760 volts—which is the same as the static loaded output voltage shown in the curve of Figure 1 for a 200-milliampere load.

(Incidentally, the ripple under load is visible on the right-hand portion of the load voltage curve of Figure 2, but is fairly small compared with the extravagant excursion of the voltage in the period immediately following the application of the load.)

A d-c voltmeter that was connected across the line at the same time merely dropped from 820 to 760 volts and gave no indication of the actual turmoil immediately after keying!

## EFFECT ON CW OPERATION

Is this turmoil anything to worry about? Well, the final stage in a CW transmitter generally runs Class C, and the transient oscillation shown across the power supply modulates each character with that same wave form quite independently of any keying filter that may be provided for click reduction. This, then, is the signal envelope—somewhat poorer than ideal!

How long is a dot or a dash in seconds? That depends on the operator for the most part, of course. But this transient oscillation certainly lasts for a considerable portion of the average CW dot or dash, because as can be seen from the timing wave of Figure 2, the voltage does not settle down to a steady ripple until more than a tenth of a second has elapsed. And as anyone who has played with timing in radio or photography work knows, a tenth of a second is far from what is normally thought of as "instantaneous."

When the load is removed (key up), the power supply voltage behaves as photographed in Figure 3—another wild peak, with the oscillation finally settling down to the no-load line. Of course, in this case there is no "on the air" effect, but the filter condensers and all other connected equipment are subjected once again to this voltage turmoil. This may explain why every once in a while a ham's whole rig is blown to kingdom come when he shuts it off.

The oscillograms shown apply only to single keying actions. Fast keying conditions intensify the transients shown in Figures 2 and 3.

## EFFECT ON PHONE OPERATION

So much for CW loads on the common garden variety power supply. Now before the phone men start laughing up their sleeves at their brass-pounding brethren with "hand-modulated" rigs, let's take a close look at Class $AB_1$, $AB_2$, and B modulators operated with conventional power supplies.

It is characteristic of these modes of operation to draw average plate current which is a function of the modulating signal. Thus, the modulator load is similar to the on-off type of load experienced in a keyed CW transmitter, and the power supply transient so induced can be a real hazard to good quality. Because of the relatively sluggish action of a d-c plate current instrument (which tends to indicate current flow averaged over about half a second or so) the actual cyclic or syllabic transient load presented to the power supply is much greater than one would be led to believe by just reading the plate milliammeter.

What happens when the power supply behaves as in Figure 1? The answer is high distortion and loss of required peak power because most of the supply voltage just is not there part of the time it is needed by the modulator, and so the modulator tubes cannot draw the peaks of plate current that the grid drive on the modulator stage says should be drawn.

And remember, distortion tests made with steady tones will not show this "dynamic" distortion because the drain on a power supply induced by a steady tone is constant when averaged over one-half of the period of the test tone wave—relatively short compared to a filter transient which lasts more than a tenth of a second.

## EFFECT ON SSB OPERATION

Single-sideband transmitters employing Class $AB_1$, $AB_2$, or B RF stages present the same type of load to their respective power supplies—and, as a result, also introduce considerable distortion in the radiated signal.

About the only types of emission in common use which do not suffer "on the air" losses as a result of transient filter oscillations are NBFM and FSK. (No transients are excited in the filter because the load is steady.) Linear amplifiers used with AM signals overcome this dynamic power supply regulation problem, but the carrier efficiency of this mode of operation is so low that use of linear amplifiers in amateur AM transmitters is not common. Similarly, constant current (or Heising) modulation for AM is another case where dynamic power supply regulation is not of primary importance. Grid modulation systems—control, screen or suppressor—also side-step the dynamic regulation problem but are inherently low-efficiency systems at best. In all these modes of operation, the only important power supply considerations are adequacy of rating and ripple filtering.

What can be done to improve the dynamic regulation of the conventional power supply? Let us follow the steps that were taken in the shack of W2KUJ to attack the problem.

## THE SOLUTION

It became apparent that merely improving the ripple attenuation by adding more filter sections affected the dynamic regulation very little. So the first step was to increase the capacity of the existing filter from 2 microfarads to 5 microfarads per capacitor. The result appears in Figure 4—which shows excellent ripple filtering but only slightly reduced voltage excursions as compared with the transient of Figure 2.

Next, the two 5-microfarad capacitors of the two-section filter were connected in parallel to make a single-section filter (with the two chokes left in series). As shown in Figure 5, the voltage excursions are not greatly changed in magnitude, but have a less complex pattern—comparable, in fact, to that of a simple damped oscillation. But here again, the oscillation is excited in the filter by the suddenly-applied load.

The next step in the test was to use 45 microfarads of capacity as the final element of the filter. The dynamic regulation performance responded nicely, as shown in Figure 6. Note the reduction of magnitude of voltage swing and lowering of the resonant frequency of the filter as compared with Figures 2, 4 and 5.

## FINAL DESIGN

This encouraged a final design in which 90 microfarads of capacity rendered the curve shown in Figure 7. Here the dynamic regulation is just slightly greater than the static regulation, which, incidentally, measures 9.34%—quite good enough for almost any amateur transmitter. The "break" characteristics of this final design are pictured in Figure 8. Use of more capacity would improve the dynamic characteristics of the power supply correspondingly because the resonant frequency of the filter would be lowered even farther. (For more detailed theory on the dynamic characteristics of plate power supplies see "Designer's Corner," page 8)

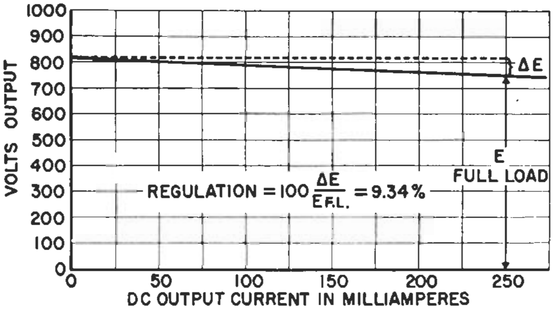

**FIG. 1** *Static regulation curve ($C_a$, $C_b$ any value)*

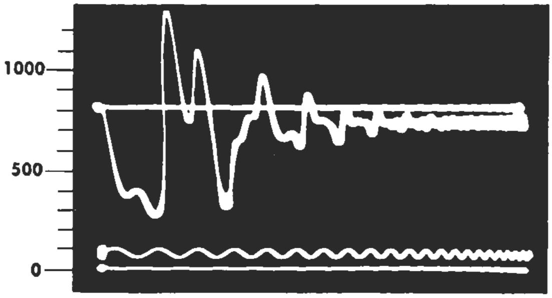

**FIG. 2** *Load applied ($C_a = C_b = 2$ mfd)*

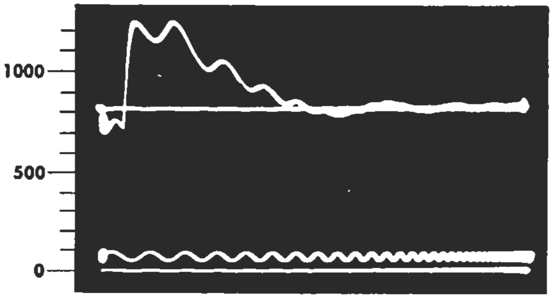

**FIG. 3** *Load removed ($C_a = C_b = 2$ mfd)*

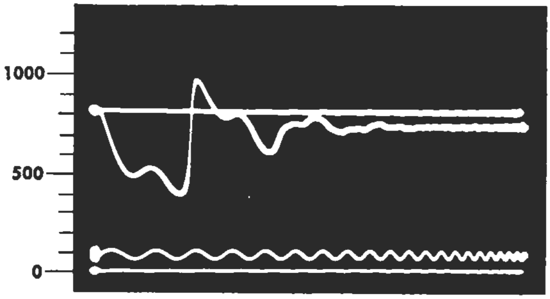

**FIG. 4** *Load applied ($C_a = C_b = 5$ mfd)*

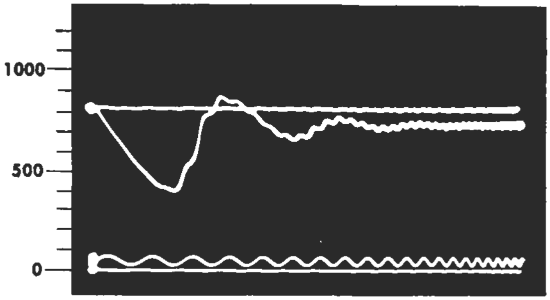

**FIG. 5** *Load applied ($C_a = 0$; $C_b = 10$ mfd)*

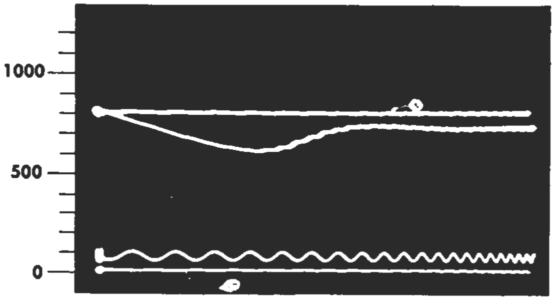

**FIG. 6** *Load applied ($C_a = 0$; $C_b = 45$ mfd)*

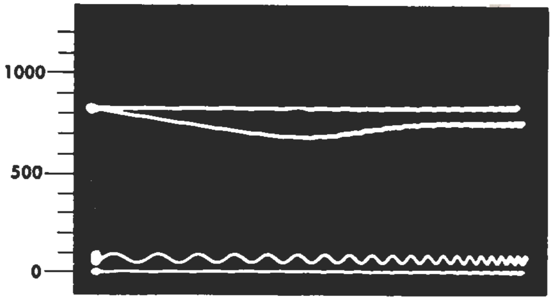

**FIG. 7** *Load applied ($C_a = 0$; $C_b = 90$ mfd)*

**FIG. 8** *Load removed ($C_a = 0$; $C_b = 90$ mfd)*

*Above data taken with this 750 V/250 ma d-c supply (see text):*

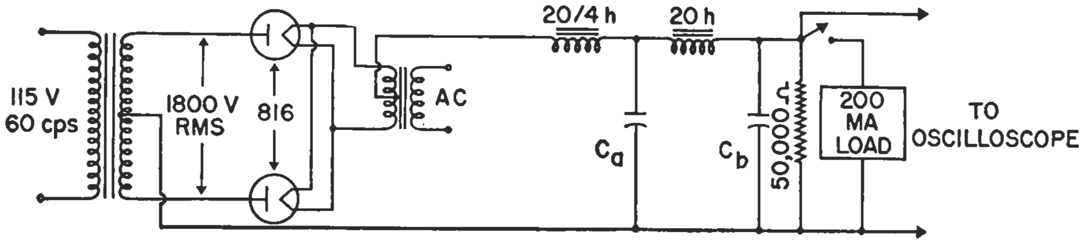

# two power supplies

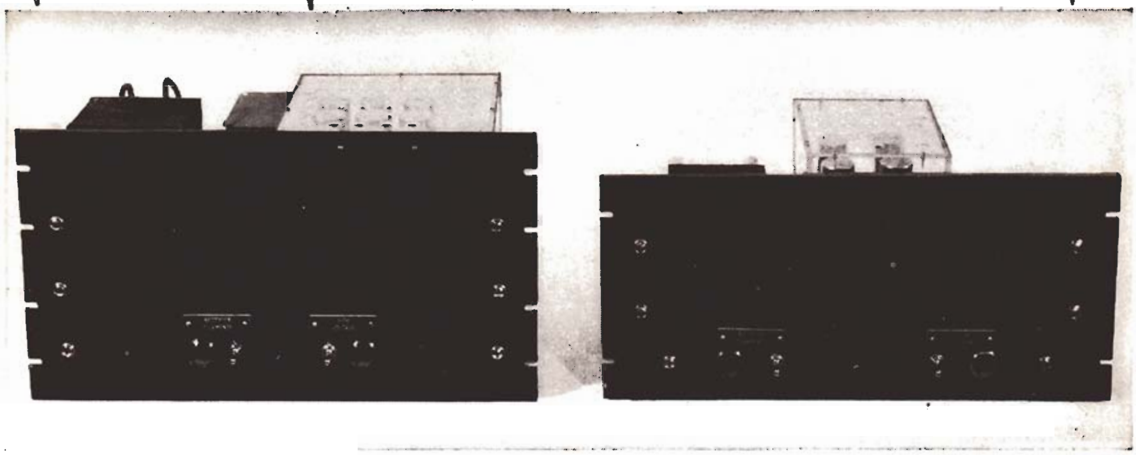

**1500 VOLT** **750 VOLT**

The dynamic characteristics of the average amateur power supply are those characteristics which become apparent in the operation of the supply when it is in actual use under average amateur operating conditions. In most amateur operations this means rapid intermittent application and removal of widely varying loads.

Meters will not measure the extensive voltage drops and peaks which are induced by varying the load—and as a result it has become somewhat traditional to regard such voltage excursions as "instantaneous" and "of little consequence."

However, as demonstrated in the tests reported in the last issue of G-E HAM NEWS, these voltage excursions are somewhat more serious than is generally believed. The oscillograms showed that when normal load is applied d-c output voltage will drop to as low as a third of the no-load voltage, then wildly overshoot the no-load level, drop again, and so on—even in a power supply which has an acceptable static regulation figure.

Instantaneous oscillations? That depends on the definition of the word *instantaneous.* As these oscillations were actually photographed on an oscilloscope along with a 60-cycle timing wave, it was shown that the transient oscillations lasted well over a tenth of a second—enough time to competently modulate every CW character and distort at least a fair portion of the first syllable of every word a phone man utters.

Experiments showed the oscillations were directly related to the resonant frequency of the power supply filter—and that the simplest solution to the problem was to lower the resonant frequency by adding capacity to the filter. It was found that addition of sufficient capacity would smooth out the dynamic regulation curve so that it would nearly coincide with the conventional static regulation curve of the supply.

However, high-voltage oil capacitors cost money—lots of it. In order to economize, at least in the sense of not running these newly designed power supplies a great deal higher in cost than conventional supplies of the same ratings, electrolytic capacitors have been specified in series-parallel combinations together with voltage-equalizing resistors.

Electrolytic capacitors generally are, we believe, better than they are cracked up to be in amateur circles. True, they may not last as long as oil capacitors, but as they have been improved considerably since first introduced, it was felt they were well worth trying. Those who still feel squeamish about using electrolytics may, of course, put in oil capacitors of the same value with equally good results. However, it is felt the electrolytics offer more capacity per year, per dollar.

In obtaining the unusually high capacity via the series-parallel methods shown in the circuit diagrams, it is important to make sure that all the equalizing resistors are used. This will insure operation of each capacitor well within its voltage rating.

The can of each electrolytic capacitor is its negative terminal. The capacitors in the series arrangement at the negative (chassis) end of the string may be mounted directly on the chassis with the metal mounting rings supplied with each capacitor. However, the remaining capacitors must be installed with cans insulated not only from the chassis but also insulated from the cans of the capacitors higher up in the string. Careful examination of the circuit diagrams will make this clear.

To provide this insulation a variety of mounting methods will suggest themselves to the builder. The method shown here is to mount capacitors that must be insulated on a piece of textolite which in turn is mounted in a hole of appropriate size cut in the chassis.

In addition, it is strongly recommended that a shield be placed over those capacitors whose cans operate above ground. ***This shield is to protect the operator—not the capacitors!*** Remember that the can of an electrolytic capacitor is generally thought of, subconsciously, as being grounded. The builder may have

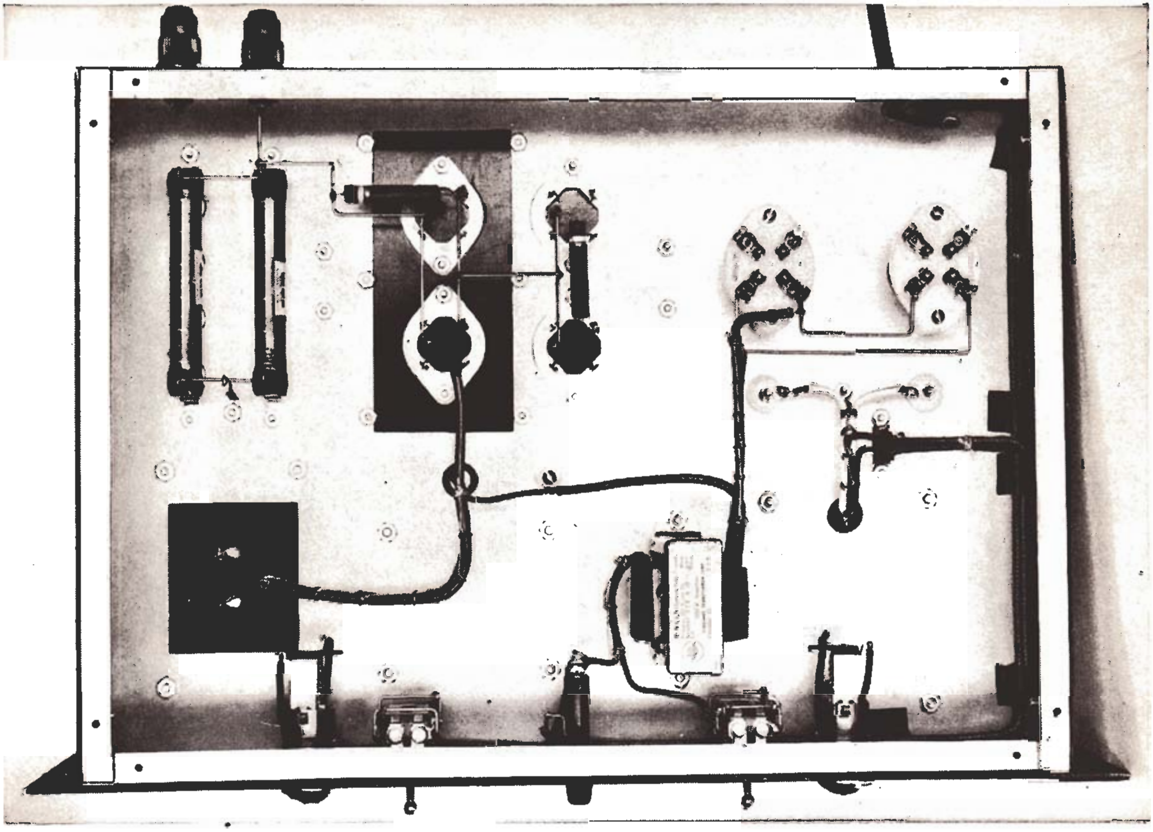

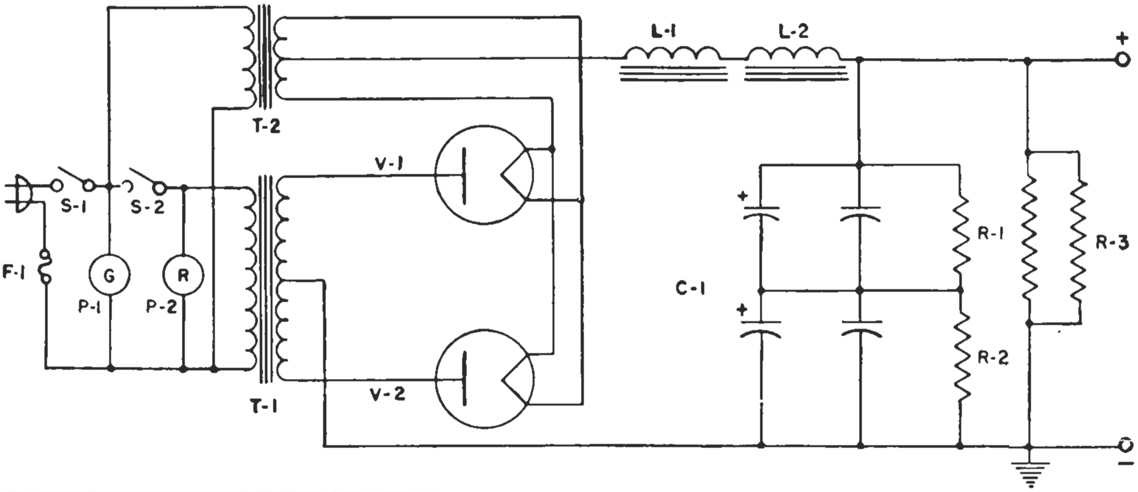

## 750 v/250 ma Power Supply

$S_1$, $S_2$—SPST toggle switch (preferably power type, 12A)
$T_1$—920-0-920 plate transformer (Stancor PC-8305)
$T_2$—2.5 v, 5A filament transformer (Stancor P-6133)
$V_1$, $V_2$—GL-816
$L_1$—20/4 h at 30/300 ma, 80 ohms D-C resistance swinging choke (Stancor C-1720)
$L_2$—20 h, 225 ma smoothing choke (UTC S-31)
$C_1$—125 or 90 mfd (4 Sprague TVL-1760 or 1850)
$R_1$, $R_2$—200,000 ohms, 2 w composition
$R_3$—50,000 ohms, 25 w (see text)
$P_1$, $P_2$—110 v pilot lamp
$F_1$—5A slow-blowing fuse

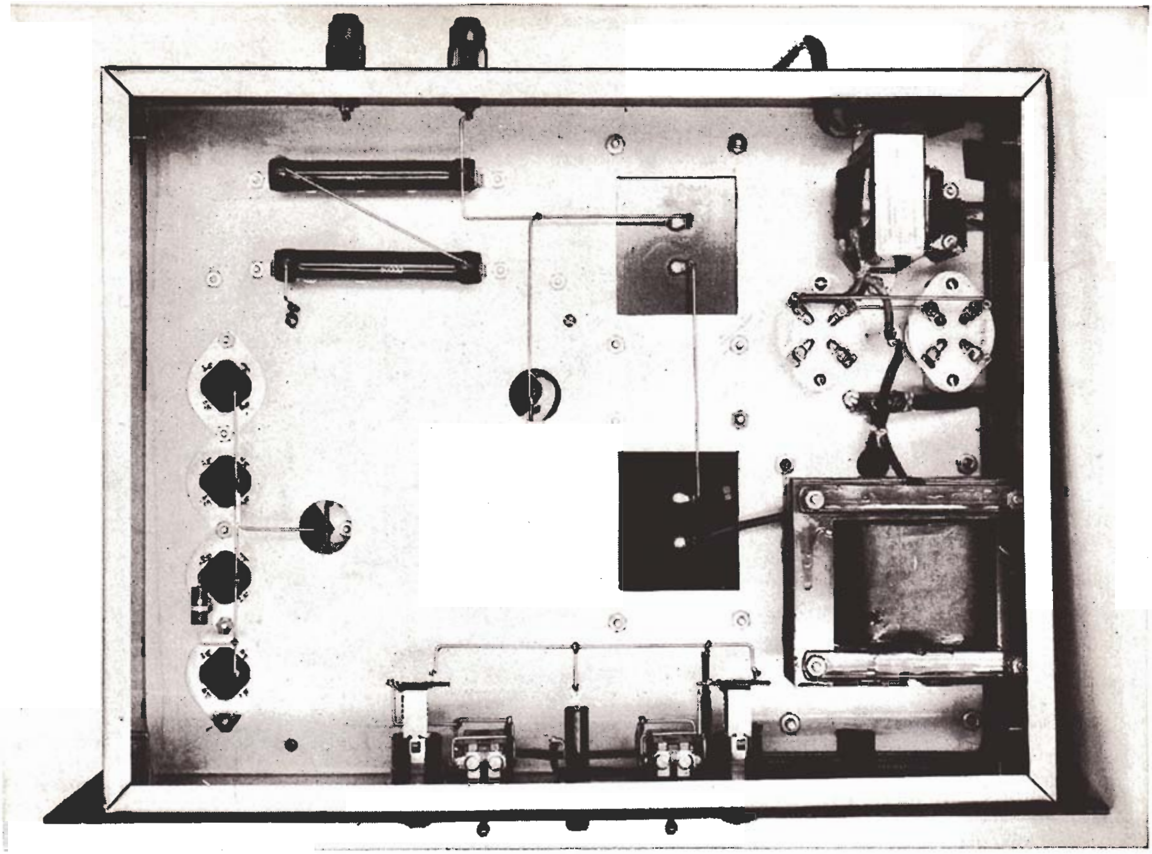

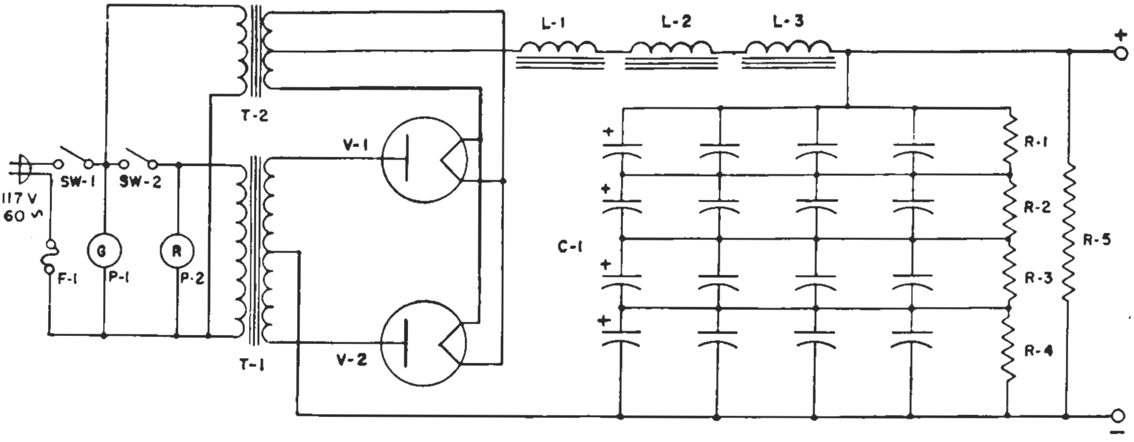

## 1500 v/250 ma Power Supply

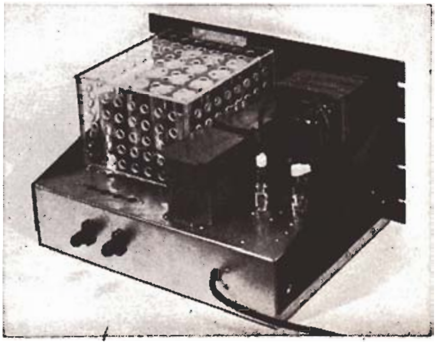

$S_1$, $S_2$—SPST toggle switch (power type, 12A)
$T_1$—1790-0-1790 plate transformer (Stancor PT-8314)
$T_2$—2.5 v 5A filament transformer (Stancor P-6133)
$V_1$, $V_2$—GL-816
$L_1$—20/4 h at 30/300 ma, 80 ohms D-C resistance swinging choke (Stancor C-1720)
$L_2$, $L_3$—20 h, 225 ma smoothing choke (UTC S-31)
$C_1$—125 or 90 mfd (16 Sprague TVL-1760 or 1850)
$R_1$, $R_2$, $R_3$, $R_4$—100,000 ohms, 2 w composition
$R_5$—100,000 ohms, 50 w (see text)
$P_1$, $P_2$—110 v pilot lamp
$F_1$—10A slow-blowing fuse

the danger fresh in his mind while he is constructing the power supply and for a relatively short time thereafter. But will he remember, say, a year from now when he opens the rig to service some component that some of those cans are well above ground? And will a visitor to the shack—or the junior operator—inquisitively poking around inside the supply, ever know—*even after he touches one*—that those cans are "hot"?

Take no chances! Time and effort taken *now* to build a shield for these above-ground cans can save a life in the future. The shields shown were fashioned out of sheets of plexiglass drilled with ventilation holes. Such refinement is not necessary, of course. Shields can be fabricated from almost any type of metal. Hardware cloth is inexpensive, easy to handle and when corner joints are soldered it makes a fairly solid shield.

While the sixteen capacitors in the 1500-volt supply may seem like a staggering number, this amounts only to a bank of four-by-four which can occupy as little space as an eight-inch square. Actually, of course, only 12 of these have to be insulated from the chassis.

Remember, the more output capacity, the better the dynamic performance of the power supply will be. If possible, it will be best to use the 125-microfarad capacitors (Sprague TVL 1760, or equivalent). As demonstrated in the previous article, it is difficult to see how one can get too much capacity built into the power supply.

On the other hand, it is important not to overdo the inductance, since the static regulation is proportional to the total d-c resistance of the chokes.

A word about the fact that 225-milliampere smoothing chokes are here used in 250-milliampere power supplies. In a search for chokes of the lowest possible cost and d-c resistance, the design work proceeded on the assumption that the published rating meant, in effect, that this choke has 20 henries inductance at a 225-milliampere load—and might very likely carry additional current. As a test, three of these chokes were put under continuous 250-milliampere loads for 24 hours with no adverse effects. Few amateurs run their power supplies at the so-called "maximum" ratings, but those who regardless of the foregoing wish to put in chokes of higher current rating and are willing to pay the additional cost can do so. The chokes specified in the accompanying circuits were chosen with this in mind—that is, to get as high inductance and as low resistance as possible at the lowest possible cost. If other chokes than those specified are used, the resistance should be checked.

A word about the bleeder resistors used in these two power supplies. To run the resistors as cool as possible, provide a maximum of safety and save space, two methods were tried. In the smaller supply, two 100,000-ohm, 25-watt resistors were used in parallel to obtain the 50,000 ohms required. (While "Dividohms" were used because they were readily available at the time, fixed resistors will serve, of course.) This method doubles the power rating and provides a measure of safety in the event one of the resistors burns out.

Of course, the larger the resistance, the smaller the wire used in a resistor—and the more prone it is to burn out. Frankly, we prefer the second method—employed in the 1500-volt supply—of using two 50,000-ohm, 50-watt resistors in series to obtain the 100,000 ohms of resistance necessary in this power supply. This, too, doubles the power rating and provides as large wire as feasible.

A multitude of refinements can be made on a power supply, of course—one of the most worth while being a safety interlock arrangement in the final installation. However, outside of including fuses, switches and pilot lamps in the accompanying circuit diagrams, refinements have been left to the individual builder to include as suits his purpose. In deviating from the power supplies described herein, however, care should be taken to insure proper insulation at all points.

Wire with insulation suitable for the voltage involved should be used not only in the power supply unit itself, but also in making interunit connections to control panels and transmitters. Adequate mechanical strength should be maintained in the mounting of the heavy transformers and chokes. Input and output connectors can be of any type suitable for the voltages concerned.

The two switches included in the diagrams permit separate control of the rectifier filament power and plate power. The first time the supply is used, a filament warm-up of at least one minute is recommended before applying plate power. This will allow the mercury within the GL-816 tubes to distribute itself properly. This also applies whenever the tubes are removed and replaced. In subsequent operation, it is necessary to allow at least ten seconds for heating the filaments before applying plate power. The power supply should be operated only when the tubes are in a vertical position.

When operated within ratings, these power supplies should give the builder the most satisfactory performance ever experienced with any power supply.

One more thing: DON'T LOAD THE POWER SUPPLY WITH YOUR BODY! Be certain to short-circuit the output terminals before working on anything connected with the supply—even when it is turned to the "OFF" position and even if the a-c line cord is pulled out. Remember that 100 microfarads of capacity holds a lot of "soup" and a burned-out bleeder will allow dangerous voltages to remain in the filter for a matter of *minutes* after it is turned off!

# - Trapping Transients -

## HOW TO PHOTOGRAPH VOLTAGE DROPS

The oscillograms shown on page 3 of this issue of G-E HAM NEWS were taken with a 5-inch cathode-ray oscilloscope fitted with an oscillograph camera.

The power supply output voltage is fed to the vertical deflection plates of the oscilloscope through a voltage divider while a single horizontal sweep is started by the same switch that applies the load to the power supply. The load, incidentally, was a vacuum tube biased to cut off for no-load conditions and made to take load by controlling the grid voltage with the switch. This type of load simulated the load applied to a power supply feeding a keyed stage in a transmitter.

On one occasion the transient voltage developed in the power supply was so high that the multiplier resistor of a voltmeter reading the output voltage of the supply under test arced across and burned out the meter. That time the voltmeter *did* give some indication of the turmoil in the power supply following a suddenly applied load!

* * *

Good dynamic regulation in a power supply (see G-E HAM NEWS, Volume 9, Nos. 1 & 2) is particularly important in an SSB transmitter to obtain the peak output of which the amplifier is capable. And with so many fellows turning to SSB (over a thousand, according to what we hear), the question continually has come up as to just what practical advantage you get with 100 or so microfarads of capacity in your power supply filter. In other words, a lot of fellows ask if 20 or 30 microfarads won't do just as well in practical operation.

The answer lies in the oscillograms of our issue of Volume 9, No. 1. They show the sort of dynamic regulation you get with varying amounts of capacity. They show how performance improves continually as you add capacity. You will note, however, that the performance has improved tremendously by the time the capacitance reaches a value of 45 microfarads. After that, although the improvement continues with additional capacitance, the improvement naturally is smaller.

# Designer's Corner—Designing Power Supplies

Some time ago when checking out my SSB transmitter I ran into a dismaying situation.

Checks with a steady audio tone showed the rig was putting out all that could be asked for. But voice peaks measured on the oscilloscope would not come anywhere near the same level. The cause was not easy to determine, but it finally turned out to be tremendous voltage drops in the power supply during a considerable portion of each syllable as a result of filter oscillations. In a more recent test I actually photographed these voltage drops, as pictured in the foregoing article.

The problem is one which involves effective damping of filter resonance or reducing the coupling between the load variations and the resonant system of filter chokes and capacitors—or both—without sacrificing efficiency or static regulation, and without overloading the rectifier tubes or any other power supply component. All this must be done without increasing the cost of the final design appreciably over that of the conventional power supply. It sounds a lot like "eating your cake and having it too," since what we have seen in the oscillograms of Figures 2, 3, 4 and 5 is commonly accepted although rarely suspected performance.

### THE SOLUTION

The practical solution of the filter resonance problem involves these basic steps:

1. Reducing the Q of the filter without increasing its series resistance, and
2. Increasing the energy storage in the last filter element.

The first step could be achieved by shunting capacitors and chokes with resistors, but if this is done the peak current handled by the rectifiers would go up, the static regulation would be poorer, and a great deal of power would be wasted in the damping resistors—that is, the efficiency of the power supply would be low.

Since the Q of the choke is $\frac{X_L}{R}$, where $X_L$ is the inductive reactance at a given frequency, and R is the effective series resistance of the choke at the frequency considered, and since the Q of the filter is equal to the Q of the choke (if the capacitor has relatively little effective series resistance), Q can be lowered by decreasing $X_L$ or increasing R. If R is increased the static regulation will suffer as a consequence, so the approach should be through decreased $X_L$. Since $X_L = 2\pi f L$ a low product of $f \times L$ is desired. In the interest of efficiency and static regulation, practical limits are placed on the value of L, the inductance of the choke, so the factor f is the only one left to be altered.

### NEED LOWER FILTER Q

What determines f? The resonant frequency of the filter is the quantity f in question. To a first approximation $f = \frac{1}{2\pi\sqrt{LC}}$ where C is the capacity of the filter condenser with which L resonates. Therefore, the Q of the filter can be lowered by increasing C, and this helps in attainment of the second basic step listed above.

What would have happened if L had been increased by a factor of 9, instead of increasing C by the same factor? The resonant frequency would have been lowered as much, but the series resistance probably would increase by about the same factor (it certainly would if 9 times the number of identical chokes had been used) and the static regulation would be nine times that indicated by Figures 1, 2, 4, 5, 6, and 7, or 84%, a drop from 820 volts, no load, to 131 volts at 200 MA load! The Q would be the same in the filter, but the total performance would be so sadly degraded that such a supply would be valueless except for salvage of parts.

In some cases, the best design would be one in which both the chokes and the condensers were increased in value until suitable dynamic performance was obtained. In high-voltage supplies this begins to pay dividends since the "critical"[1] inductance increases with voltage for a given minimum or bleeder current drain, and high-voltage capacitors begin to get expensive. Static regulation depends on the DC resistance of the chokes (together with the equivalent series resistance due to the plate transformer) but a given total equivalent resistance in the chokes and transformer yields less ***percentage*** voltage drop as the operating voltage is increased.

### TWO POWER SUPPLY DESIGNS

We have designed two power supplies which promise to provide excellent dynamic regulation, good static regulation and good ripple filtering. Best of all, these supplies are not expensive ones. The first supply has a continuous rating of 750 volts/250 MA output for moderate and low power applications, while the second is rated at 1500 volts/250 MA. One nice thing about it all is that the builder may utilize the principle we have explained and proven in order to build other supplies which exhibit equally good (or better) dynamic regulation. Either power supply is ideally suited for CW transmitters, Class B modulators, linear amplifiers (such as the Lazy Linear[2] or the Power Peaker[3]), or any application where the voltage and average current requirements are within the ratings given. The final samples of these two power supplies were not completed by the time this issue of G-E HAM NEWS went to press, but construction details will be given in the March-April issue.

*—W2KUJ*

---

[1] See G-E HAM NEWS Volume 7, No. 2, page 6; also, the ARRL Handbook. In these treatments only static regulation is considered. Good background material, though.

[2] G-E HAM NEWS Volume 4, No. 4

[3] G-E HAM NEWS Volume 7, No. 5

## Trapping Transients

### HOW TO PHOTOGRAPH VOLTAGE DROPS

The oscillograms shown on page 3 of this issue of G-E HAM NEWS were taken with a 5-inch cathode-ray oscilloscope fitted with an oscillograph camera. In this photograph Don Norgaard, W2KUJ, is shown just before he opens the shutter of the camera and applies the load to a power supply he is testing for dynamic regulation.

The power supply output voltage is fed to the vertical deflection plates of the oscilloscope through a voltage divider while a single horizontal sweep is started by the same switch that applies the load to the power supply. The load, incidentally, was a vacuum tube biased to cut off for no-load conditions and made to take load by controlling the grid voltage with the switch. This type of load simulated the load applied to a power supply feeding a keyed stage in a transmitter.

On one occasion the transient voltage developed in the power supply was so high that the multiplier resistor of a voltmeter reading the output voltage of the supply under test arced across and burned out the meter. That time the voltmeter *did* give some indication of the turmoil in the power supply following a suddenly applied load!

Don has been a regular contributor to G-E HAM NEWS and has been responsible for the design of the *Harmoniker*, the *Lazy Linear*, the *Signal Slicer*, the *SSB, Jr.*, and other pieces of ham gear described in G-E HAM NEWS.

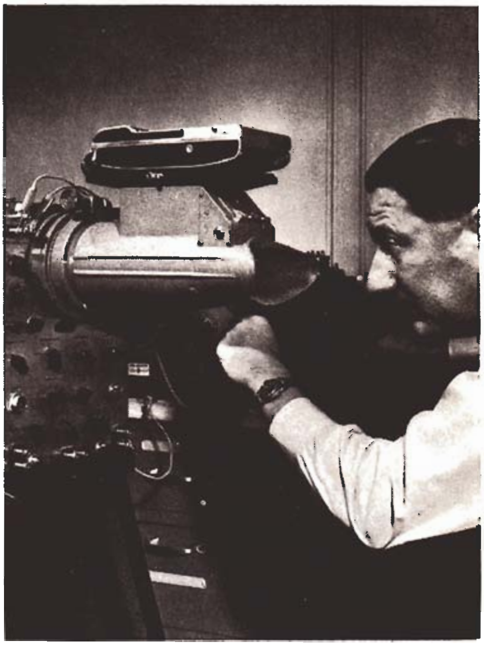

## The Detrimental Effects of Tuned Power Supply Filters

Since the G-E HAM NEWS issues covering dynamic power supply regulation were published, many radio amateurs have commented that a parallel-tuned circuit immediately following the rectifier would eliminate the need for placing high filter capacity across the power supply output. For full-wave or bridge rectifier fed from a 60-cycle power line, the resonant filter would be tuned to 120 cycles. Series-resonant circuits, shunted across the power supply, also have been suggested as a solution.

After extensive checking, the following reasons were found why resonant filters are not a practical solution to good dynamic power supply regulation problems.

1. It is very difficult to calculate the value of capacity which must be placed either in series or parallel with a given filter choke to form either a series or parallel resonant circuit, respectively, tuned to 120 cycles. The effective inductance of an iron-core choke changes with varying current drain, usually decreasing as the current flow increases, and therefore, the resonant frequency of the filter will increase with increasing current flow through the choke.

2. Although such a resonant portion of the filter can reduce ripple on a steady-state basis, such action generally is at the expense of poor transient response, or ringing effects. The static regulation of such a filter can be better than the conventional type when due account is taken of the effective series resistance of the filter system. However, this is purely an economic consideration, since high Q (low resistance) chokes can be made but at relatively high cost.

3. Either of the resonant systems will cause rather high peak rectifier currents as compared with a properly designed choke-input filter, and in some cases can result in destruction of the rectifier tubes. Since we are interested in helping customers and radio amateurs obtain satisfactory tube life and operation, we have avoided suggesting methods such as resonant filters.

4. In conclusion, resonant filters are a step in the wrong direction, since it is resonance in power supply filters that causes poor transient voltage regulation. Our approach was as follows: (1) to lower the resonant frequency; (2) thereby lowering the Q of the filter; (3) increase the energy storage in the filter; and (4) decreasing the coupling of transient loads into the filter, considering the source of the transient to be the load circuit.

# DUAL-VOLTAGE POWER SUPPLIES

**From September-October, 1957**

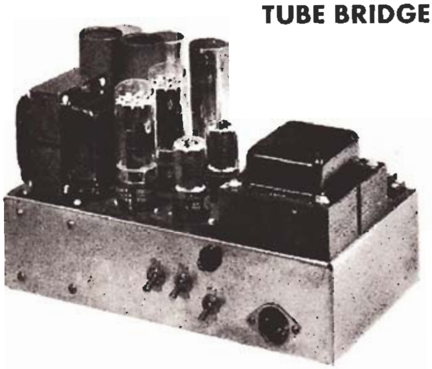

**TUBE BRIDGE**

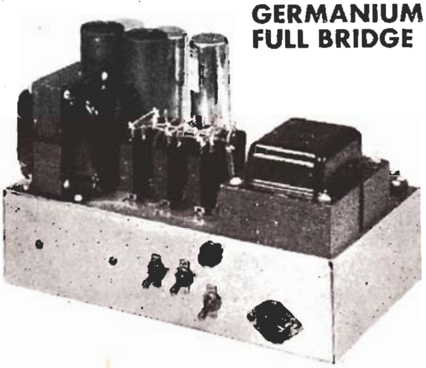

**GERMANIUM FULL BRIDGE**

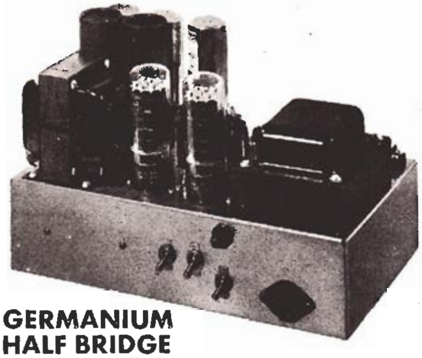

**GERMANIUM HALF BRIDGE**

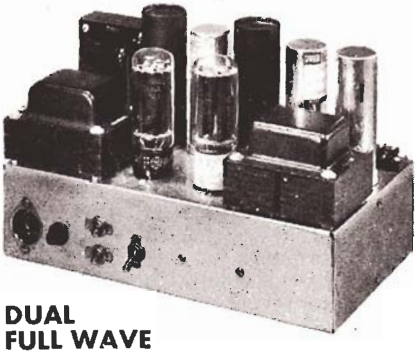

**DUAL FULL WAVE**

*Need two high voltages for your medium power transmitter? Build a dual-voltage power supply from one of these circuits, tailored to the contents of your junk box, or from inexpensive television receiver replacement components.*

—*Lighthouse Larry*

*Preparation of a simple and stable 100-watt transmitter for the November–December, 1957 issue demanded an equally simple dual-voltage power supply. Our solution: Combine plentiful replacement-type components in bridge and full-wave rectifier circuits, smooth with a high-capacity filter, and package compactly in a corner of the transmitter cabinet.*

*—Lighthouse Larry*

## GENERAL CIRCUIT DETAILS

A majority of amateur transmitters in the medium power class (60 to 200 watts) require at least two different high voltages, usually about 300 volts for the oscillator and intermediate stages, and 600 to 750 volts for the power amplifier.

These voltages may be obtained by any of three means: A separate power supply for each high voltage required; or single power supplies having either a transformer with a tapped high-voltage winding feeding separate full-wave rectifiers; or a single bridge rectifier with the lower DC voltage obtained from a center tap on the high-voltage winding. The two latter circuits will be described here.

As the simplified schematic diagram of a vacuum tube bridge rectifier in Fig. 1 shows, the cathodes of diode tubes A and B, connected to opposite ends of the high-voltage winding, each should be powered from a separate filament transformer having adequate insulation. In addition, a third filament transformer is required for diodes C and D, having their cathodes connected together. Thus, tube bridge rectifiers with directly heated cathodes have complex heater circuitry.

Development of rectifier tubes having separate cathodes electrically isolated from the heater has made possible tube bridge rectifiers with fewer filament transformers. Publication of the "Economy Power Supply" circuit[1] a few years ago suggested this innovation, in addition to more efficient utilization of replacement type radio and television receiver power transformers in dual-voltage power supplies. Type 6X5-GT indirectly-heated full-wave rectifier tubes were suggested for $V_1$ and $V_2$ in the original "Economy" type bridge circuit, shown in Fig. 2A. The 6X5-GT may be operated with the cathode 450 volts positive or negative with respect to the heater.

Since the DC output current rating of the 6X5-GT is only 70 milliamperes, connecting each pair of tube plates in parallel still limits the maximum output current of the original economy power supply to about 140 milliamperes. By substituting a pair of similar full-wave rectifier tubes, 6AX5-GT's, for the 6X5-GT's, the same circuit is capable of supplying up to 300 milliamperes total current when operated into a choke input filter with up to 700 volts AC applied to the bridge rectifier.

A single filament transformer, $T_3$, powers both tube heaters, but three precautions should be taken to keep the heater—cathode voltage on $V_1$ and $V_2$ within the rating. First, one side of the heater circuit should be connected to the center tap on the high-voltage transformer winding. Second, the high-voltage transformer, $T_1$, should not be turned on until the heaters of $V_1$ and $V_2$ reach operating temperature. Third, $V_1$ and $V_2$ should be hot before heater voltage is applied to $V_3$, the full-wave rectifier forming the other two legs of the bridge circuit.

In the circuit of Fig. 2A, $V_1$ and $V_2$ are heated by $T_3$ when the main power switch, $S_1$, is closed. Primary power for the high-voltage transformer, and the filament transformer for $V_3$, $T_4$, should be applied by closing $S_2$ at least 30 seconds later than $S_1$. If $S_2$ is closed immediately after $S_1$, a negative voltage will appear at the "HV/2" output terminal until the heaters of $V_1$ and $V_2$ warm up. Heater power for $V_3$ may be taken from $T_1$ if a suitable winding is available.

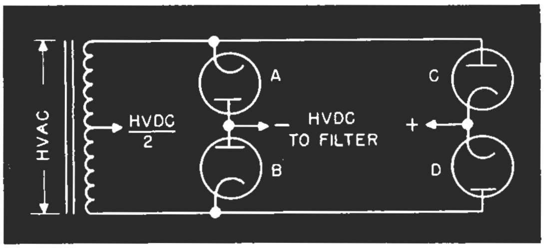

Fig. 1. Basic schematic diagram of a bridge rectifier circuit using four single diode tubes.

A single 5U4-GB or 5R4-GYA will suffice for $V_3$ with maximum current drains of 250 milliamperes or less. If sufficient heater power is available, two 5U4-GB, 5R4-GYA or 5V4-GA tubes may be connected in parallel to reduce the voltage drop through the tubes.

Choke input filters, as shown in Fig. 2B, are recommended for both the high-voltage and half-voltage outputs, even though the output DC voltage under full load will be about 10 percent lower than with a capacitor input filter. However, the peak current through the rectifiers is much lower with choke input.

Four 125-mfd, 450-volt electrolytic capacitors, $C_1$ to $C_4$, connected in a series—parallel circuit, are desirable for good dynamic voltage regulation, as described in "ABOUT POWER SUPPLIES" (See G-E HAM NEWS, January-February and March-April, 1954, Vol. 9, Nos. 1 and 2, for details). These capacitors, plus a single smoothing choke in each filter, reduce the AC ripple appearing on the output voltage to a fraction of one percent. Additional low-resistance filter chokes may be connected in series with $L_1$ to further reduce the resonant frequency of the filter circuit.

A simple circuit by which the primary voltage applied to $T_1$ may be adjusted also is shown in Fig. 2A. All heater windings on $T_1$ are connected in series (the windings should be in phase) and placed in series with the primary. The actual voltage on the primary will then be either higher or lower by the total voltage of the heater windings. A single-pole, double-throw switch, $S_3$, applies normal primary voltage with the switch arm as shown, or alternate primary voltage with the switch arm in the "up" position.

If single 6.3- and 5-volt windings are connected in series, the primary voltage can be changed to about 10 percent above and below normal. A 15 percent change either way will result from connecting one 5-volt and two 6.3-volt windings all in series. It is thus possible to boost the output voltage of a transformer high-voltage winding 50 to 80 volts if desired. Or, the high voltage can be reduced to a suitable value, if it is too high, by reversing the connections to the heater windings. However, the AC high voltage from $T_1$ should not exceed the rating of the rectifiers under any conditions.

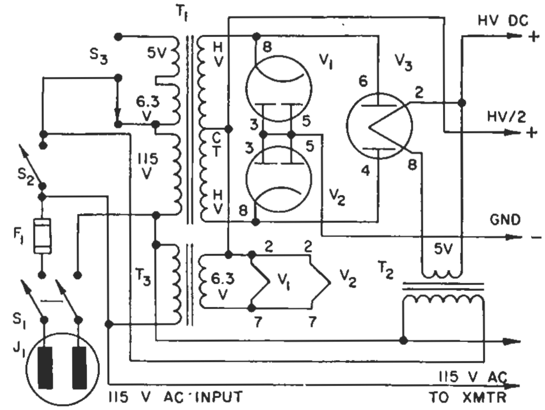

Fig. 2A. Schematic diagram of the "Economy" bridge rectifier circuit. Note that the heater supply winding for $V_1$ and $V_2$ is connected to the high-voltage-winding center tap.

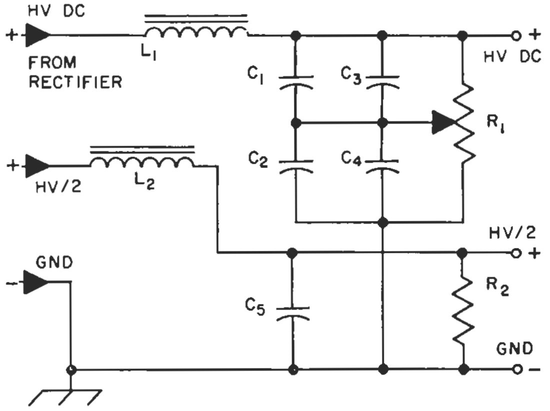

Fig. 2B. Schematic diagram of the dual choke input filter circuit recommended for use with all rectifier circuits described herein.

## PARTS LIST

$C_1$—$C_5$—125-mfd, 450-volt electrolytic (Sprague TVL-1760).
$F_1$—Small cartridge fuse and holder (3-ampere fuse for power supplies with up to 200 ma output, 5-ampere fuse for over 200 ma).
D—Semiconductor rectifiers (See TABLE I).
$J_1$—2-prong male chassis power receptacle.
$J_2$—Female high-voltage connector.
$L_1$—8 to 20-henry, 200 to 500-ma smoothing choke, with 1600-volt insulation.
$L_2$—20-henry, 50-ma smoothing choke.
$R_1$—50,000-ohm, 50-watt adjustable resistor.
$R_2$—25,000-ohm, 25-watt resistor.
$S_1$—Double pole, single throw 3-ampere toggle switch.
$S_2$—Single pole, single throw 3-ampere toggle switch.
$S_3$—Single pole, double throw 3-ampere toggle switch.
$S_4$—2-pole, 3-position 3-ampere selector switch.
$T_1$, $T_7$, $T_8$—Replacement type radio or television receiver power transformer, approximately 700 volts, center-tapped, at 150–350-ma DC output, 5-volt and 6.3-volt heater windings.
$T_2$, $T_9$, $T_{10}$—5-volt, 3-ampere transformer, 115-volt primary.
$T_3$—6.3-volt, 3-ampere transformer, 115-volt primary.
$T_4$, $T_6$—Replacement type television receiver power transformer, up to 750 volts, center-tapped, at up to 400-ma DC output, 5-volt and 6.3-volt heater windings.
$T_5$—5-volt filament transformer; 3 amperes for one 5U4-GB; 6 amperes for two 5U4-GB's, 115-volt primary.
$V_1$, $V_2$—G-E 6AX5-GT full-wave rectifier tubes.
$V_3$—$V_6$—G-E 5R4-GYA, 5U4-GB, or 5V4-GA full-wave rectifier tubes (see text).
$V_7$—G-E 5R4-GYA or 5U4-GB full-wave rectifier tubes (see text).

By substituting the alternate primary circuit for $T_1$ shown in Fig. 3, any of three primary voltages may be selected. The center position on $S_4$ applies normal line voltage to $T_1$; the **HIGH** position connects the heater windings to add to the line voltage; and the **LOW** position reverses the heater windings and thus subtracts from the line voltage.

The primary voltage switching circuits and high-voltage filter circuit are recommended for the other rectifier circuits which follow. Of course, pilot lights, relay control circuits, cabinet safety interlock circuits, indicating meters, output voltage regulators and other extra features may be added as desired. Only the basic circuitry has been shown here.

The maximum output current rating given replacement type power transformers by most manufacturers apply for these conditions: One, continuous operation; two, a full-wave rectifier circuit; and three, a capacitor input filter. For intermittent amateur type operation, approximately the same output current (and nearly twice the output power) can be drawn from the same transformer without excessive heating under the following conditions: First, operating into a bridge rectifier which more efficiently utilizes the high-voltage winding; and second, a choke input filter which reduces the peak current and power loss in the high-voltage winding as compared with a capacitor input filter.

It is a fairly simple matter to add the additional components to a good full-wave power supply to convert it to a bridge rectifier circuit and thus considerably increase the total DC output power obtainable from the supply. The only chassis-top space needed is for the two 6AX5-GT rectifier tubes. The extra filament transformer ($T_3$) and metal can or tubular type electrolytic capacitors ($C_1$ and $C_3$) can be located beneath the chassis.

### SEMICONDUCTOR BRIDGE RECTIFIERS

Recent developments in the field of semiconductors have resulted in the marketing of highly efficient, moderate cost germanium, silicon and selenium rectifiers. Even though the maximum ratings usually apply to half and full-wave rectifier circuits, several identical semiconductor rectifiers can be connected into a bridge rectifier circuit. In a bridge circuit, the peak inverse voltage across each leg will be only half as much as in a half or full-wave rectifier for a given DC output

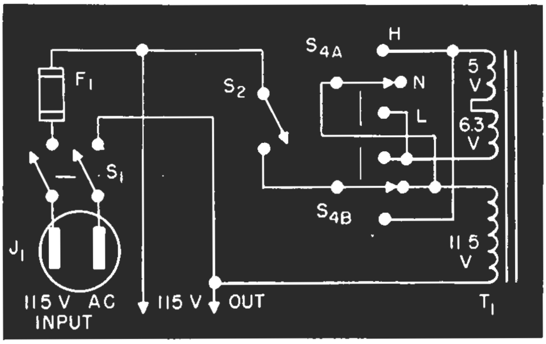

Fig. 3. Optional transformer primary voltage switching circuit. Additional heater windings may be added in series if available. All windings should be in phase.

---

[1] Grammer, "More Effective Utilization of the Small Power Transformer," QST, November, 1952, page 18.

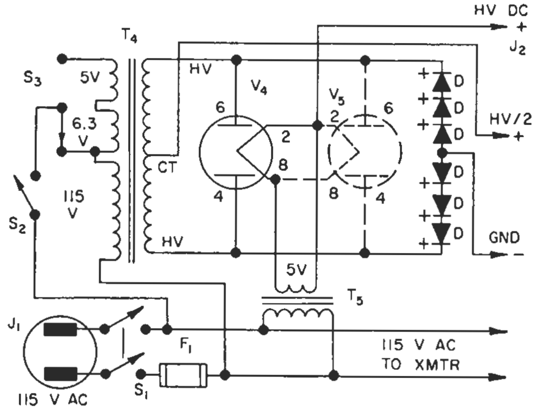

Fig. 4. Schematic diagram of a bridge rectifier converted from a full-wave rectifier by adding three series-connected semiconductor rectifiers in each leg. The optional rectifier tube, $V_5$, should be included to handle maximum current drains between 275 and 550 milliamperes.

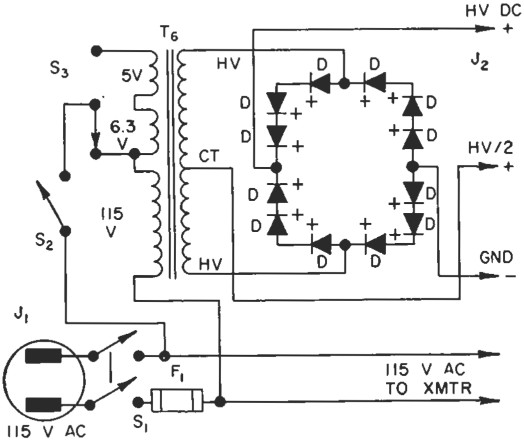

Fig. 5. Schematic diagram of a semiconductor bridge rectifier having three rectifier cells in each leg.

voltage. Thus, each rectifier in a bridge circuit will withstand nearly twice the rated AC voltage without exceeding the peak inverse voltage rating.

Series-connected semiconductor rectifiers can be employed in the place of rectifier tubes in the two added legs in the previously described "Economy" bridge circuit, as shown in Fig. 4. This arrangement is adaptable to a power supply in which the extra filament transformer winding is not readily available.

The DC high voltage is taken from the heater circuit of $V_4$, and approximately half this voltage will be delivered from the center tap on the high-voltage winding, formerly connected to ground in the full-wave circuit. The lower voltage is rectified by the two strings of semiconductor rectifiers operating in a full-wave circuit. An additional full-wave rectifier tube, $V_5$, may be connected in parallel with $V_4$ to reduce the tube voltage drop if the additional heater power is available from $T_5$.

A bridge circuit in a new dual-voltage power supply can employ semiconductor rectifiers in all four legs. This circuit, shown in Fig. 5, also is suitable when an existing power supply is being rebuilt. Three series-connected rectifier cells are shown in each leg of these circuits. Only two rectifiers per leg may be necessary for certain operating conditions, as shown in the circuits of Fig. 6A and 6B.

Table I shows the maximum recommended operating voltages and currents for several popular semiconductor rectifiers in the aforementioned circuits. The 550-milliampere rating shown for the combination tube and semiconductor rectifier circuits is the maximum current that two 5U4-GB tubes in parallel will deliver. Note that the 1N158, 1N539 and 1N540 rectifiers are capable of handling far more current than the average power transformer will deliver.

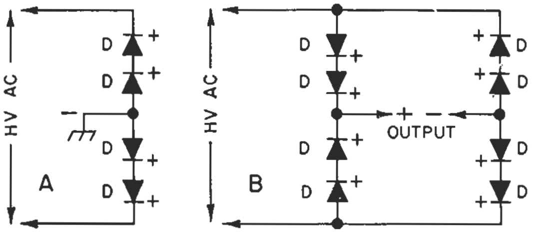

Fig. 6. Schematic diagrams showing (A) four and (B) eight rectifier cells used in half and full semiconductor bridge circuits in Figs. 4 and 5, respectively.

**TABLE I—SEMICONDUCTOR RECTIFIER DATA**

| Rectifier | Ckt. Fig. | Quant. Rect. | Max. AC Input V. | Max. DC Current |
|---|---|---|---|---|
| 1N93 | 4 | 6 | 660 V. | 300 MA. |
| 1N93 | 5 | 12 | 660 V. | 300 MA. |
| 1N153 | 4 | 6 | 660 V. | 550 MA. |
| 1N153 | 5 | 12 | 660 V. | 1000 MA. |
| 1N158 | 6A | 4 | 810 V. | 550 MA. |
| 1N158 | 6B | 8 | 810 V. | 1000 MA. |
| 1N539 | 6A | 4 | 840 V. | 550 MA. |
| 1N539 | 6B | 8 | 840 V. | 1500 MA. |
| 1N540 | 6A | 4 | 1120 V. | 550 MA. |
| 1N540 | 6B | 8 | 1120 V. | 1500 MA. |
| 300-MA Selen. Rect. | 4 | 6 | 990 V. | 500 MA. |
| | 5 | 12 | 990 V. | 500 MA. |
| | 6A | 4 | 660 V. | 500 MA. |
| | 6B | 8 | 660 V. | 500 MA. |

A bridge rectifier made from replacement type selenium rectifiers costs less than a comparable germanium or silicon bridge, but the full-load voltage drop is about four times higher. Also, the temperature of the air surrounding selenium rectifiers should be kept below 115 degrees Fahrenheit. Germanium and silicon rectifiers are rated for normal operation in temperatures up to 130 degrees. In addition, the silicon rectifiers will operate at much higher temperatures with reduced current output.

## TWO-TRANSFORMER DUAL FULL-WAVE RECTIFIER

The high-voltage windings of two similar power transformers may be connected in series, instead of in parallel, and used in a power supply having separate full-wave tube rectifiers for the full and half DC output voltages. As shown in Fig. 7, the midpoint between the windings becomes the negative output voltage connection. The center taps of the two windings are connected to one full-wave rectifier, $V_6$, and the outer ends feed the other full-wave rectifier, $V_7$. The windings must be in phase, otherwise there will be practically no DC output voltage from either rectifier.

The diagram shows four heater windings all connected in series to provide a greater adjustment in the primary voltage than is possible with two or three heater windings on a single transformer. All windings should be in phase.

A 5U4-GB, 5V4-GA, or 5Y3-GT full-wave rectifier is suitable for the moderate current usually drawn from the lower output voltage tap. A 5U4-GB may be used for $V_7$ only when the full secondary voltage of each transformer is below 550 volts. A 5R4-GYA full-wave rectifier at $V_7$ can be operated with up to 950 volts per transformer.

Even for intermittent amateur service, the total current drain from both DC output voltage taps should not exceed the rated current of each transformer by more than 40 percent. The voltage regulation of this circuit is not as good as with a single power transformer, because the rectified current flows through the high-voltage windings only in one direction and tends to saturate the transformer cores at high current drains.

## CONSTRUCTION DETAILS

The test model power supplies shown on the front page, and in the top views, Fig. 8, were constructed on 7 x 12 x 3-inch-deep aluminum chassis (Bud AC-408). When power transformers and chokes weighing more than 10 pounds each are used, a steel chassis is advisable, even though it is harder to cut and drill. The heavy components were placed at opposite ends of the chassis mainly to balance the weight load, with the rectifiers between them. The chassis size and parts placement may be changed to suit the equipment which the supply is to power.

The electrolytic capacitors should not be crowded against components which radiate considerable heat, such as the tubes. Capacitors $C_1$ and $C_3$ in the filter circuit diagram, Fig. 2B, were mounted on the insulating fiber mounting plates furnished with the capacitors. Since the metal cans of these capacitors are several hundred volts positive with respect to the chassis, fiber insulating sleeves should be placed over them. Holes 1½ inches in diameter were cut in the chassis for these capacitors to prevent the mounting lugs from shorting to the chassis.

Filament transformers, small filter chokes, bleeder resistors and other small parts are mounted under the chassis wherever convenient. The wiring is run along the chassis corners and between components, then laced into a cable upon completion. External connections are made through suitable plugs and terminal strips. A high-voltage type connector is recommended for the full DC output voltage.

Semiconductor rectifiers should be mounted atop the chassis, rather than under it, to allow adequate circulation of air around them. Rectifiers having insulated mounting feet may be fastened directly to the chassis in one or two rows. Small rectifiers having only leads can be mounted on a terminal board like that shown in Fig. 9. Connecting leads to the rectifiers are run up through rubber-grommeted holes in the chassis.

Another mounting method is recommended for selenium rectifiers in the half and full bridge circuits,

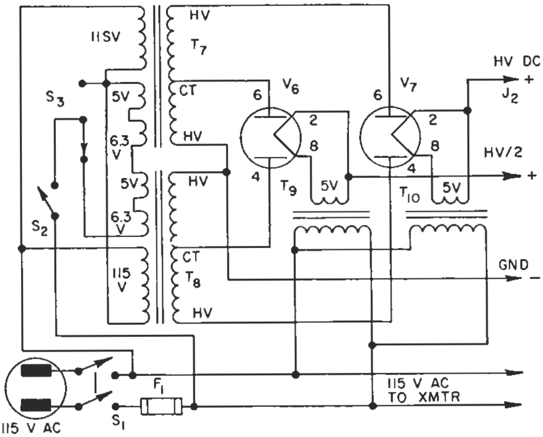

Fig. 7. Schematic diagram of a dual full-wave rectifier circuit using high-voltage windings of two replacement type power transformers in series. Extra "spaghetti" insulating tubing should be slipped over the transformer high-voltage leads to guard against insulation breakdown.

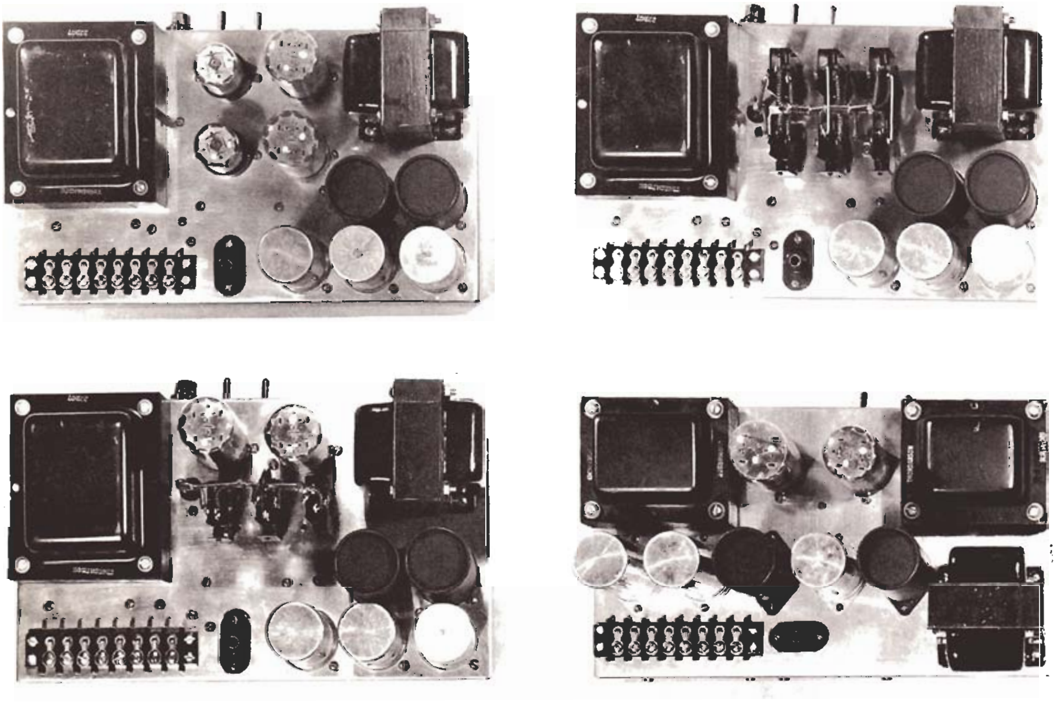

Fig. 8. Top views of the four types of power supplies shown on the cover. Note that the rectifiers are placed well away from the filter capacitors. Chassis size and layout may be varied to suit space requirements.

Figs. 4 and 5. The thin fiber tubes through which the rectifier fastening screws pass may not withstand the voltages involved, so four rows of three rectifiers each were fastened to the 5 x 5 x ¼-inch-thick laminated insulating board (Textolite or bakelite), shown in Fig. 10. The bottom edge of this board was drilled and tapped for fastening screws which run up through the chassis. A perforated metal shield should be placed over both germanium and selenium rectifiers to prevent curious fingers from touching dangerous voltages!

### OPERATION

Power supplies do not have to be tuned up or otherwise adjusted, but a wiring check is advisable before applying power for the first time. After turning on the AC power, both DC output voltages without a load, and with full load, should be checked. These may be raised or lowered by adjusting the transformer primary voltage, as previously outlined.

Output voltage tests were conducted on all power supply circuits to obtain the comparative voltage regulation figures shown in Table II. When testing each power supply, the primary voltage was adjusted so that the high-voltage winding always delivered 700 volts AC regardless of the output current load. The figures thus will help determine the output voltage that can be expected from each type of rectifier when operated from a transformer having other than 700 volts AC output.

Other tests were run with the power supplies delivering twice the output current at which the power transformers were rated in full-wave rectifier service. After an hour of this torture, no components overheated to the extent that they smoked or showed other signs of failure.

These tests, plus hundreds of hours of use in transmitters, offer proof that these simple power supplies made from low-cost components will "deliver the goods" in your 60 to 200-watt transmitter.

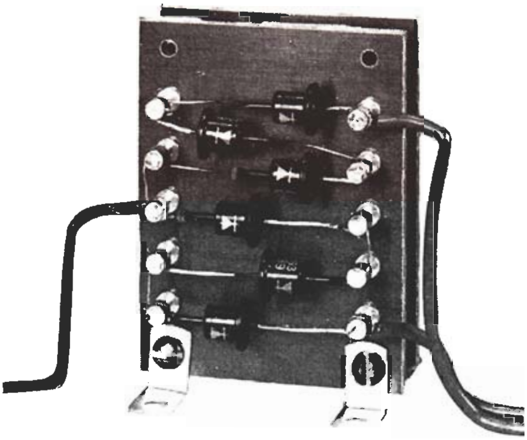

Fig. 9. View showing a suggested mounting arrangement for a group of lead-mounted germanium or silicon rectifiers on terminal boards. The boards were fastened together with bolts and spacers, then mounted on the chassis with small angle brackets.

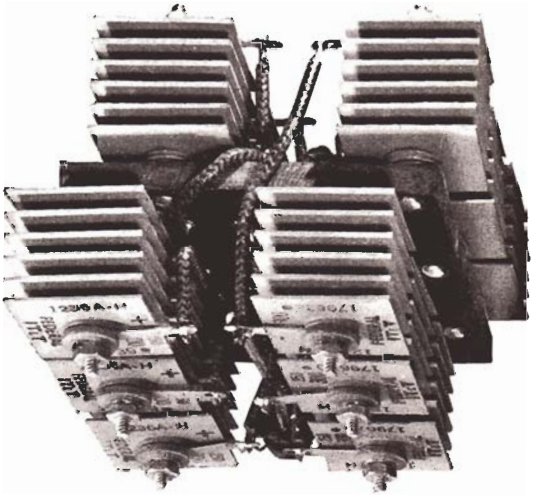

Fig. 10. Detail view of the suggested mounting method for the twelve selenium rectifiers. This assembly fits into the same area occupied by the other types of rectifiers shown in the top views.

**TABLE II—POWER SUPPLY OUTPUT VOLTAGE MEASUREMENTS**

| POWER SUPPLY | | | OUTPUT—HV DC TERMINAL | | | OUTPUT-HV DC/2 TERM. WITH 50-MA LOAD AS LOAD IS VARIED ON HV DC TERM. | | |
|---|---|---|---|---|---|---|---|---|
| CIRCUIT | FIG. | RECTIFIERS | NO LOAD | 100-MA LOAD | 200-MA LOAD | NO LOAD | 100-MA LOAD | 200-MA LOAD |
| TUBE BRIDGE | 2A. | 1—5U4-GB<br>2—6AX5-GT | 720V. | 580V. | 550V. | 300V. | 260V. | 240V. |
| TUBE BRIDGE | 2A. | 2—5U4-GB<br>2—6AX5-GT | 725V. | 590V. | 560V. | 300V. | 260V. | 240V. |
| COMBINATION BRIDGE | 4. | 1—5U4-GB<br>4—1N158 | 720V. | 600V. | 570V. | 310V. | 300V. | 290V. |
| COMBINATION BRIDGE | 4. | 2—5U4-GB<br>4—1N158 | 725V. | 605V. | 575V. | 310V. | 300V. | 290V. |
| GERMANIUM BRIDGE | 6. | 8—1N158 | 740V. | 650V. | 640V. | 310V. | 305V. | 300V. |
| SELENIUM BRIDGE | 6. | 12—300-ma Selenium Rect. | 735V. | 630V. | 610V. | 305V. | 280V. | 265V. |
| TWO-XFMR FULL WAVE | 9. | 1—5U4-GB<br>1—5R4-GYA | 725V. | 580V. | 520V. | 290V. | 275V. | 265V. |

# Added Information on Dual-Voltage Power Supplies

Many requests have been received for information on whether transformers having higher voltage output can be used in the bridge rectifier circuits shown in Figs. 2A, 4 and 5 in the September-October issue; and in the full wave circuit of Fig. 7. In the circuit of Fig. 2A, the maximum total voltage from the transformer secondary we recommend is 750 volts. Otherwise, the maximum heater-to-cathode voltage rating of the tube 6AX5-GT tubes will be exceeded.

Type 6W4-GT, 6AX4-GT or 6AU4-GT single diode tubes used in the horizontal damping circuit of TV receivers have been timed in place of the type 6AX5-GT tubes. However, the 6.3-volt heater supply for these tubes should be connected to the negative side of the high voltage output, as shown in Fig. 11 below, (ground or chassis) instead of to the center tap on the transformer high voltage winding, as was done in Fig. 2A. in that issue.One or two 5U4-GB twin diode tubes, both powered from the same filament transformer, can be used for the other two legs of the bridge.

The TV damping diodes also may be used in all four legs of a bridge rectifier, as shown in Fig. 12 below. All four tube heaters may be powered from the same 6.3-volt heater supply, which should be tied back to the negative side of the high voltage output. Type 6W4-GT and 6AX4-GT tubes will deliver up to 250 ma of DC output current; and type 6AU4-GT's will deliver up to 380 ma.

Do not attempt to operate these tubes in the usual full-wave rectifier circuit, as shown in Fig. 13 below. Otherwise, the heater-to-cathode voltage rating will be exceeded when the tubes are operated from a transformer delivering more than 75 volts each side of the center tap. It is possible to operate these tubes in the same type of full-wave rectifier in which they are used in the grounded legs of bridge circuits; that is, with the plates tied together, and the cathodes connected to the ends of the high voltage winding. A DC output voltage just less than half the total transformer voltage will then be available from the transformer center tap, as shown in Fig. 14. (See below)

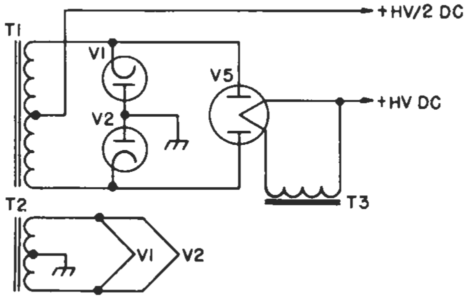

FIG. 11. "ECONOMY" TYPE BRIDGE CIRCUIT WITH TWO TV DAMPING DIODE TUBES AND ONE FULL-WAVE RECTIFIER TUBE.

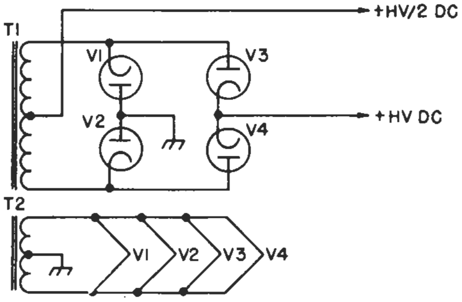

FIG. 12. BRIDGE RECTIFIER CIRCUIT USING FOUR TV DAMPING DIODE TUBES WITH ALL HEATERS POWERED FROM ONE LOW-VOLTAGE TRANSFORMER.

## PARTS LIST FOR THESE CIRCUITS - FIGS. 11 TO 17

D - Germanium, Selenium or Silicon semiconductor rectifiers. Sum of maximum peak inverse voltage ratings of rectifiers in each leg of bridge should be approximately equal to, but not less than the total RMS AC output voltage of high voltage winding on power transformer, $T_1$.

$T_1$- Power transformer having total AC high voltage winding about 20 percent higher than desired full load DC output voltage from power supply. Current rating about equal to desired full load output current.

$T_2$ - Filament transformer, 6.3 volts, current rating equal to total drawn by $V_1$ through $V_4$.

$T_3$- Filament transformer, 5 volts, 3 amperes for one 5U4-GB or 5R4-GYA; 6 amperes for two such rectifiers.

$V_1$--$V_4$--6W4-GT, 6AX4-GT or 6AU4-GT TV damping diode tubes.

$V_5$--5U4-GB full wave rectifier for transformers having up to 550 volts output per plate; 5R4-GYA for up to 950 volts per plate.

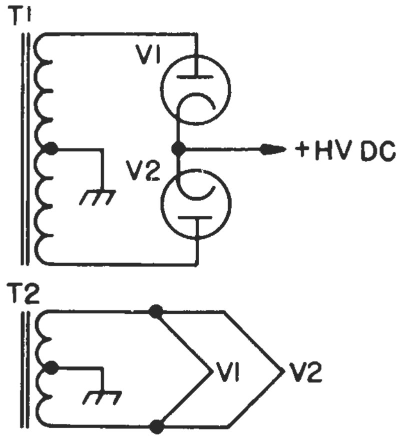

FIG. 13. FULL—WAVE CIRCUIT NOT RECOMMENDED FOR TV DAMPING DIODE TUBES.

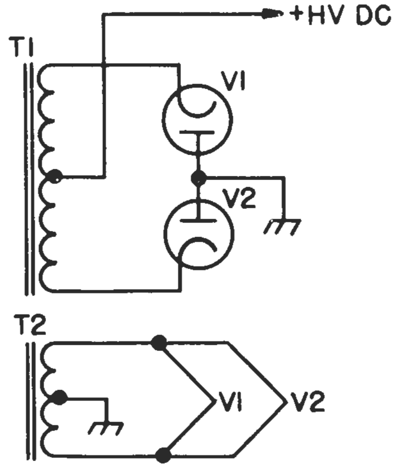

FIG. 14. FULL—WAVE CIRCUIT IN WHICH TV DAMPING DIODE TUBES MAY BE OPERATED WITHOUT EXCEEDING HEATER—CATHODE VOLTAGE RATING.

Some readers have expressed the opinion that we are operating the semiconductor rectifiers above their maximum peak inverse voltage ratings in the bridge circuits of Figs. 4, 5 and 6 of that issue. Note in Fig. 15 below that the current path through a bridge rectifier having two rectifier sections in each leg of the bridge actually flows through four rectifiers, and not two rectifiers, as apparently has been assumed. Thus, when 660 volts AC is applied across a bridge having a total of eight 130-volt RMS, 380-volt peak inverse rectifiers, each rectifier is withstanding a peak inverse voltage of only 234 volts. Even though the applied AC voltage per rectifier is 165 volts RMS, the peak inverse voltage in a bridge rectifier is only half that of a full-wave rectifier to which the same total AC voltage is applied.

The mathematics of this reasoning are as follows: With 660 volts AC (sine wave) applied across the bridge, the total peak inverse voltage will be 660 times 1.414, or about 935 volts. Dividing this across four rectifiers results in a peak inverse voltage per rectifier of only 235 volts. Although it should be possible to apply up to 266 volts RMS per rectifier to this circuit, it is best to be conservative and consider 212 volts RMS per rectifier as the maximum (300 volts peak inverse).

Germanium TV rectifiers produced by General Electric also may be used in these circuits, but they are recommended only for experimental and amateur type usage. The G-E commercial grade rectifiers specified in the G-E HAM NEWS article should be used for commercial applications. The G-E 1N1008 single section rectifier may be operated with up to 380 volts peak inverse, at a total bridge rectifier output current of 800 ma.The G-E 1N1016 two-section doubler type rectifier has two 380-volt peak inverse, 25--ma rectifiers in series. Thus, a single 1N1016 rectifier will replace two single section rectifiers having the same current rating.

Diagrams are shown below in Fig. 16 for connecting the G. E. 1N1016 dual section rectifier in a half-bridge circuit requiring three rectifiers, (top) and full-bridge (bottom) circuit requiring six rectifiers, with three rectifier sections in each leg. Connections for high voltage AC power, and the DC output voltage connections to the filter, are labelled.

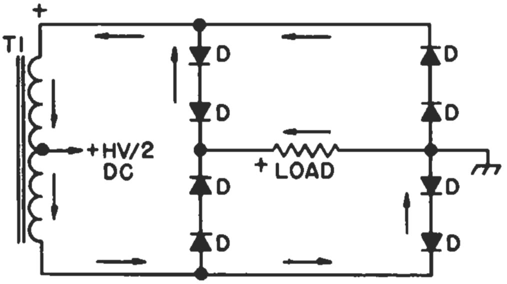

FIG. 15. SEMICONDUCTOR DIODE BRIDGE RECTIFIER CIRCUIT WITH ARROWS SHOWING PATHS OF DC CURRENT FLOW THROUGH RECTIFIERS FOR ONE-HALF OF THE A-C CYCLE. ARROWS REVERSE FOR OTHER HALF OF CYCLE.

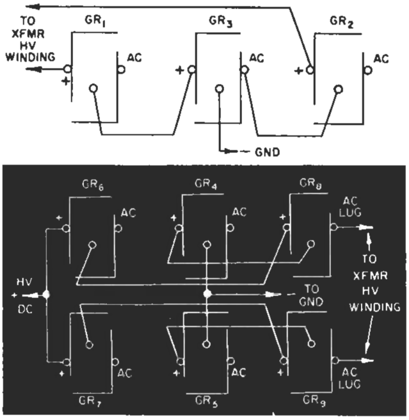

FIG. 16 CONNECTION DIAGRAMS FOR THREE G. E. 1N1016 RECTIFIERS IN HALF-BRIDGE CIRCUIT (TOP), AND SIX 1N1016 RECTIFIERS IN FULL BRIDGE CIRCUIT (BOTTOM).

In the G-E HAM NEWS diagram of Fig. 7 for a two-transformer full-wave rectifier circuit, transformers having higher voltage secondaries may be used, depending upon the ratings of the rectifier tubes used in the circuit. For example, a pair of transformers, each having up to 950 volts total secondary voltage, may be operated into a 5R4-GYA rectifier tube on the higher voltage output section. A 5U4-GB may be used with transformers delivering up to 550 volts each, or when the voltage taken from the center taps for the lower output voltage is less than 550 volts, provided that a choke input filter is used.

Another circuit for a dual-voltage power supply, which we did not publish may be made by connecting the output of two separate full-wave rectifiers in series. One full wave rectifier is operated with the high voltage winding center tap grounded, as shown in Fig. 17. The positive voltage from the cathode of this rectifier is then connected to the center tap on the high voltage winding of a second full-wave rectifier. A total current about one and one-half times the continuous duty current rating of the transformers may be drawn from this power supply when the transformer heater windings are not used.

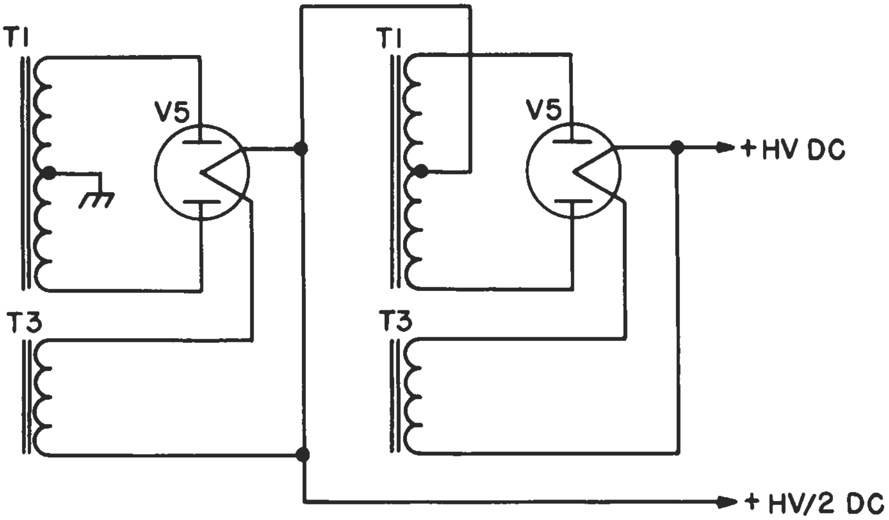

FIG. 17. CIRCUIT FOR CONNECTING TWO FULL–WAVE TUBE RECTIFIERS, EACH FED BY SEPERATE CENTER – TAPPED HIGH VOLTAGE TRANS–FORMER WINDINGS, IN THE SERIES TO OBTAIN DOUBLE THE PLATE VOLTAGE OF ONE TRANSFORMER RECTIFIER COMBINATION.

# HIGH POWER MOBILE POWER SYSTEMS

**W8DLD and W8WFH,** above, have designed and constructed high-power mobile amateur radio stations for their station wagons which give them home-station performance on the highway. **G-E HAM NEWS** is proud to present a series of three articles which describe their systems, starting in this issue. Techniques for power supplies, receivers, and linear amplifiers for CW and SSB communication will be covered.

## MEET THE AUTHORS . . .

W8DLD — A. F. (Al) Prescott, is an engineer with the electronics laboratory at General Electric's Cuyahoga Lamp Plant.

W8WFH — W. C. (Bill) Louden, is technical counselor in Discharge Advance Engineering at G-E's Large Lamp Department.

Both of these operations are located at General Electric's Nela Park, in Cleveland, Ohio, home of our world-famous Lighting Institute.

Al and Bill have amassed years of experience in developing radio equipment — and their 3-phase power system — for mobile use. Their present SSB installations reflect the results, and are nearly all home made, including the antennas, except for the Command set receivers. Their stations operate on all frequencies from 3.5 to 29.7 megacycles, but their favorite channels for daily mobile operating are from 14,250 to 14,300 kilocycles.

Their phasing type SSB exciters have some unusual circuits and ideas, so the readers of *G-E HAM NEWS* will be seeing novel features of this equipment in coming issues. The receiving systems and a linear amplifier will be described in the next two issues.

Dramatic evidence of the reliability of their equipment was illustrated by their being able to keep three-times-daily schedules while separated at times by more than 2,000 miles during vacation motoring trips in 1959 and 1960.

# MOBILE POWER SUPPLY IDEAS

From July-August, 1960

By A. F. Prescott, W8DLD, and W. C. Louden, W8WFH

*TODAY'S MORE POWERFUL mobile amateur radio equipment can overload even the larger electrical systems in late model automobiles. Solve this problem by installing a constant voltage, variable-frequency, 3-phase, AC power system—large enough for even a kilowatt mobile rig—using the principles and ideas described in this article.*

With many mobile radio installations now requiring 200 watts and more power from automotive electrical systems, it is usually necessary to run the car's engine when this equipment is operated for more than a few minutes at a time to avoid discharging the battery. The standard automotive electrical system, as shown in Fig. 1, just wasn't designed for this purpose.

Many commercial, police and taxi vehicles have 3-phase AC alternators installed to provide extra power for two-way radio equipment. One manufacturer, Leece-Neville, supplies either 6-volt, 100-ampere, or 12-volt, 50-ampere alternator systems, rated at 600 watts output (see page 2 for details).

However, the 600-watt limitation is due mainly to the rectifier connected to the alternator output to change the 3-phase AC current into direct current, as shown in the block diagram of Fig. 2. Over 200,000 miles of field "testing" on the alternators installed to power W8DLD/M and W8WFH/M have proven this system capable of supplying more than 1-KVA of power, even under summer driving conditions.

Note that the rectifier is used mainly for battery charging and other normal needs of the automotive electrical system. The high voltage DC power supply can be fed directly from the alternator, avoiding the less efficient method of first rectifying the 3-phase AC power into direct current, and then obtaining high voltage with a dynamotor, transistorized D-C-to-DC converter, or vibrator power supply.

Voltage regulation of the alternator system is very good. The "variable frequency" mentioned above occurs from changes in engine speed, from 100 cycles with the engine idling, to nearly 1,000 cycles at top speed. However, modern power transformers, even though rated for 60-cycle operation, are capable of operating efficiently over this wide frequency range. And, usually the 60-cycle ratings may be considerably exceeded at the higher supply frequencies.

(continued on page 5)

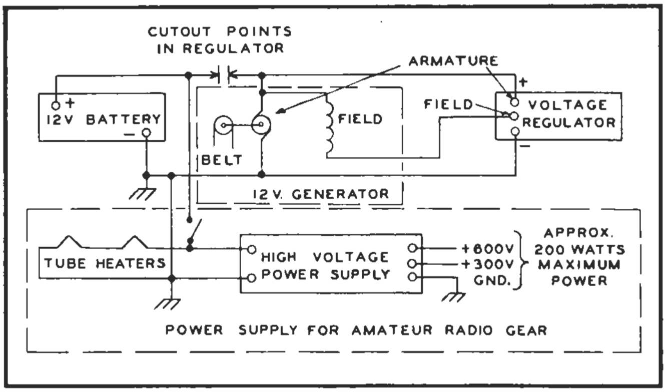

**FIG. 1. BLOCK DIAGRAM** of a typical 12-volt DC automotive electrical system. Approximately 200 watts of power may be drawn on an intermittent basis to operate mobile radio equipment. Usually the automobile engine must be kept running if more than a few minutes operation of radio equipment is attempted to keep the storage battery charged.

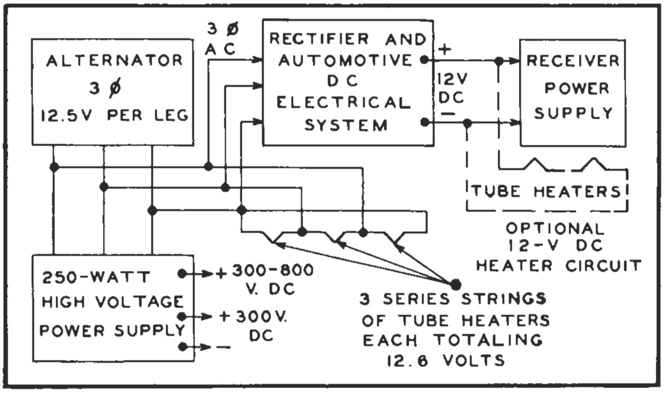

**FIG. 2. BLOCK DIAGRAM** of an alternator type automotive generating system which can be installed in place of the conventional DC generator. The alternator generates 3-phase AC power which is then rectified and used to charge the storage battery. The AC power is fed into a 3-phase high voltage power supply of up to 250 watts capacity. Tube heaters in radio equipment may be operated either from the DC battery power, or from the AC alternator output.

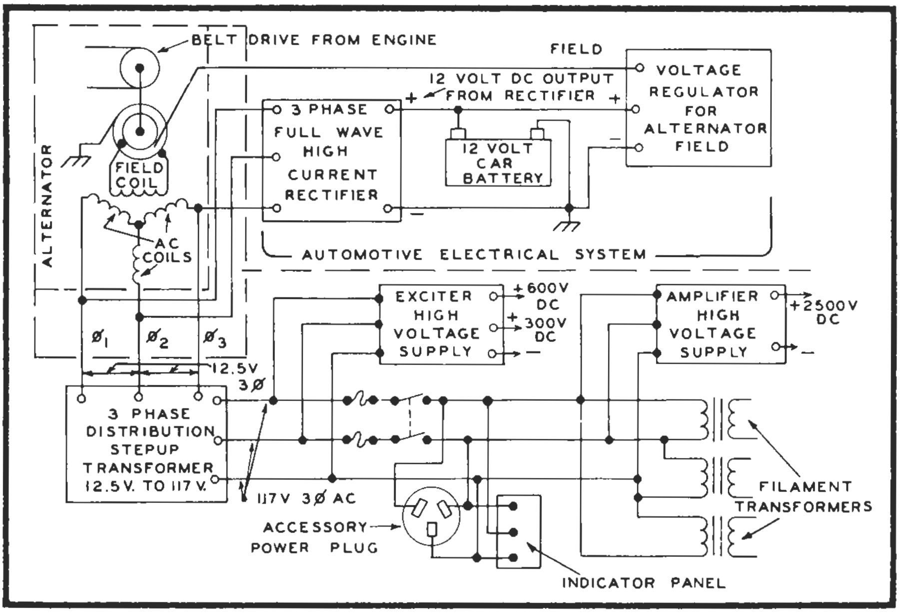

**FIG. 3. DIAGRAM** of the 3-phase automotive power system devised by the authors. The 3-phase 12.5-volt output from the alternator is stepped up to 117 volts with a home-made distribution transformer. Sufficient power for a full-kilowatt transmitter is available from the components specified in this article.

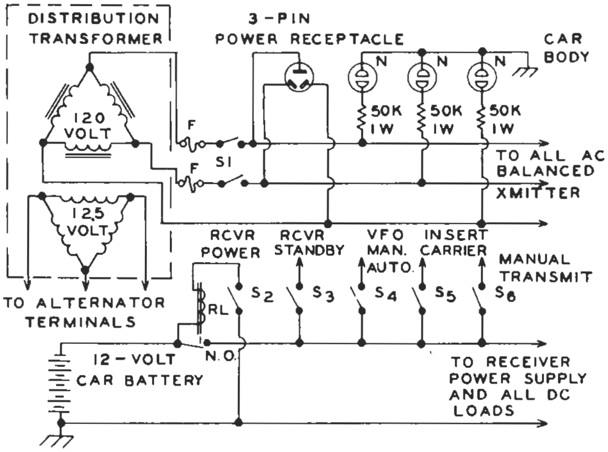

**FIG. 4. CONTROL PANEL** schematic diagram for the 3-phase AC electrical system. Fuses "F" and $S_1$ should be rated higher than the maximum current drawn from the AC circuit by the radio equipment. Switches $S_2$ to $S_6$ are SPST type toggles and energize DC relays which perform the functions indicated in the diagram.

**W8DLD** in the operator's seat of his high-power SSB mobile installation. Control panel is at center of dash, with voltmeters added to monitor the 12-volt DC and 117-volt AC circuits. Receiver is crystal converter into modified BC-453 Command Set tuner. Note hand key for CW operation just to left of steering wheel.

Up to about 300 watts of DC power can be obtained from a 3-phase high voltage supply having transformers that step up the 12-volt AC alternator output to a few hundred volts. For higher power requirements, it is desirable to first step up the 12 volts to about 120 volts AC, and then use standard transformers in the high voltage DC power supply. This concept is illustrated in the complete mobile power supply systems used by W8DLD and W8WFH, shown in the diagram of Fig. 3.

The 3-phase distribution step-up transformers used in these installations, pictured on this page, were made by the authors. Constructional details are given in a folder which is available from the *G-E HAM NEWS* office. It also is possible to use three 12-volt to 120-volt step-up transformers with primaries and secondaries in a delta connection, but the efficiency and regulation may be not as good.

An essential part of the system is the control and indicator circuit shown in Fig. 4. All three neon lamps should light with the system in operation; one lamp not glowing indicates that one of the three AC phases may be grounded to the car. The polarized 3-prong plug is handy for operating soldering irons and other accessories. Control switches $S_2$ to $S_6$ operate 12-volt DC relays to perform the required functions.

Once the alternator installation is complete and the regulator is working properly, test the regulation of the 120-volt distribution transformer with the lamp load shown in Fig. 5. Measure the voltage in each phase with the three 60-watt lamps connected; it should be about 120 volts. Then close the DPST switch; about 110 volts should be indicated. Try this test at different engine speeds. The engine idling speed should be set so that the voltage reads at least 100 volts, with the full 780-watt load.

When planning the filament and plate power supplies for the radio equipment, make sure that a load balanced to within 5 percent is presented in the 3-phase system, both at 12 and 120 volts AC. Use three filament transformers for the equipment, one across each phase, with approximately the same power drains on each.

Plate power supplies designed for a 3-phase supply usually are closely balanced. Suggested circuits for high-voltage supplies are shown in Figs. 6 through 10. Characteristics of the various circuits are shown in TABLE I. Note that 3-phase rectifier circuits — particularly the full-wave types — feature low ripple voltage, low peak inverse voltages on the rectifiers, and high output voltage.

Use whatever components are available — rectifier tubes if you have filament transformers for the circuits of Figs. 6 and 7 — or silicon rectifiers in the circuits of Figs. 8, 9 and 10. Only 4 to 6 mfd. or filter capacitance is required on power supplies for r.f. equipment; a small 4-henry choke and two

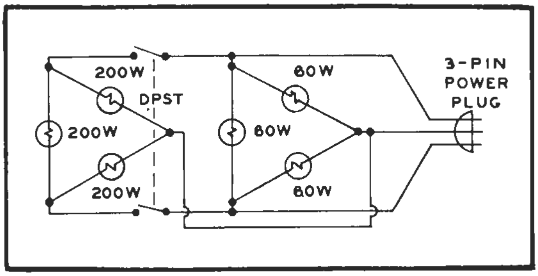

**FIG. 5. CIRCUIT DIAGRAM** for a 780-watt load with which the alternator may be tested after installation. Three 200-watt, and three 60-watt 117-volt lamps are used as loads across each of the three AC phases from the distribution transformer.

**ENGINE COMPARTMENT VIEW** of W8DLD's station wagon, showing Leece-Neville alternator in foreground and 3-phase distribution transformer mounted just ahead of it next to radiator.

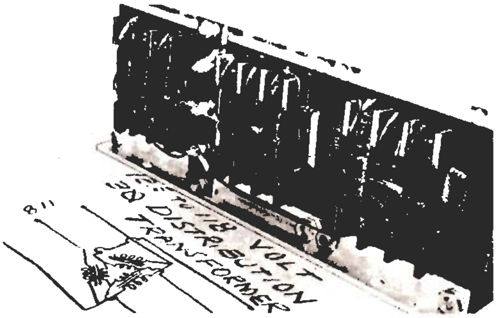

**DISTRIBUTION TRANSFORMER** completely assembled and ready for installation. Entire transformer has been impregnated with insulating varnish to protect it from the moisture present in hot weather.

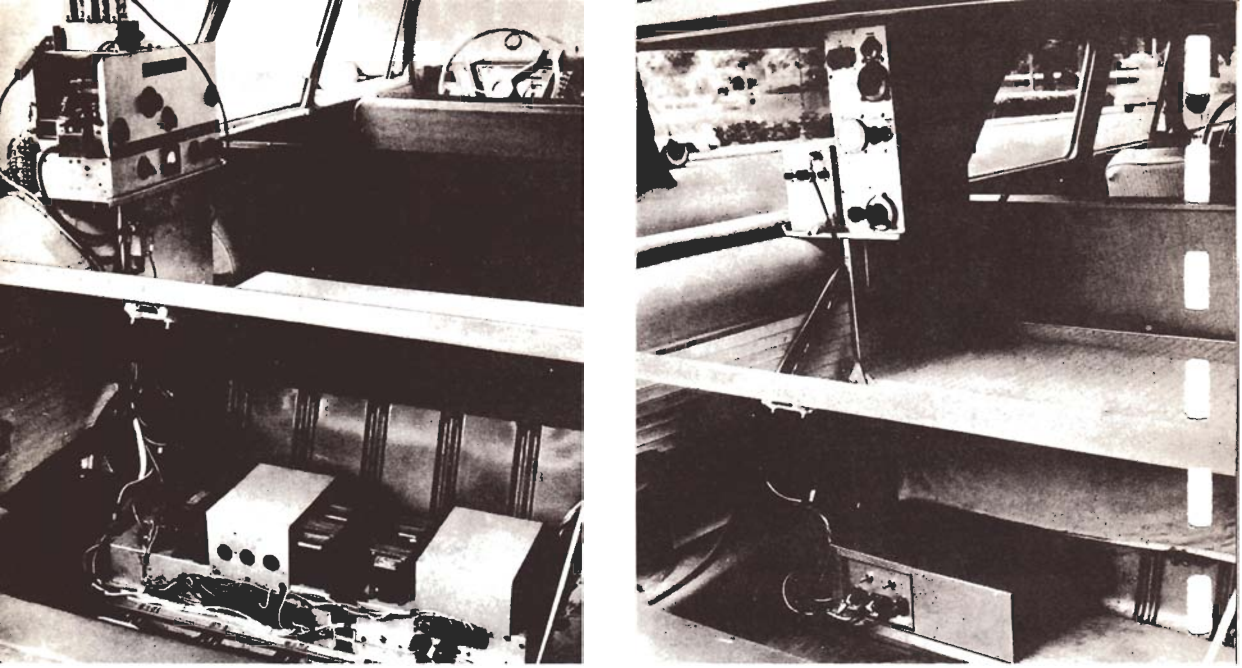

**INSTALLATIONS OF POWER SUPPLIES** and linear amplifiers in W8DLD's (left) and W8WFH's (right) station wagons. Storage compartments under cargo decks are handy locations for high voltage power supplies, while r.f. equipment is fastened to shelves atop rear wheel housings.

### BIBLIOGRAPHY OF ARTICLES ON THREE-PHASE MOBILE POWER SYSTEMS

"A Different Approach to High-Power Mobile," by J. Emmett Jennings, W6EI; **QST**, April, 1953, page 28; also **ARRL Mobile Manual**, page 202.

"Three-Phase Power Supply for Mobile Use," by J. Emmett Jennings, W6EI; **QST**, January, 1958, page 28; also **ARRL Mobile Manual**, 2nd edition, page 183.

"Inside Leece-Neville," by D. W. Potter, W2GZD; **CQ**, May, 1955, page 16.

"High Power Three-Phase Mobile Power Supply," by M. Stevens, W8IWG; **CQ**, October, 1955, page 15.

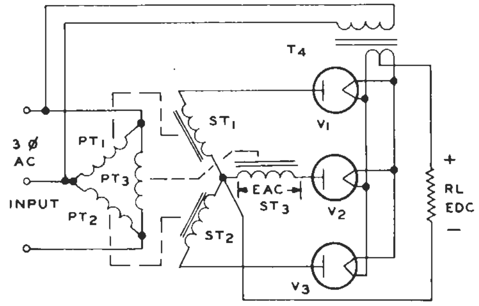

**FIG. 6. 3-PHASE STAR HALF WAVE** rectifier circuit for tube rectifiers. See Fig. 7 for component details.

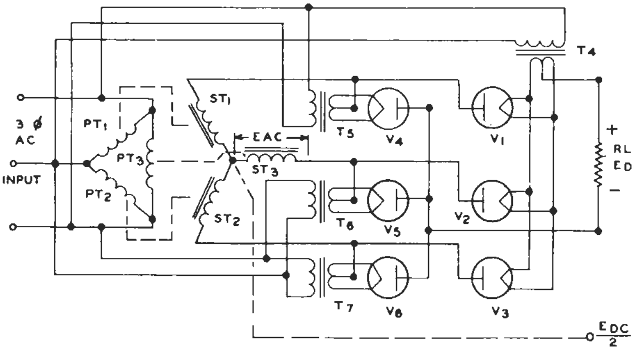

**FIG. 7. 3-PHASE STAR BRIDGE** full wave rectifier circuit for high vacuum (5U4-GB, 5AR4, etc.) and mercury vapor (GL-816, GL866A) rectifier tubes ($V_1$ to $V_6$). Transformers $T_1$, $T_2$ and $T_3$ (actually designated as "PT" and "ST" to indicate primary and secondary) are discussed in the text. Filament transformer $T_4$ should be rated for the current drain of three rectifier tubes; $T_5$, $T_6$ and $T_7$ are rated for one tube each. See TABLE I for voltage, current and peak inverse ratings.

## TABLE I — 3-PHASE RECTIFIER CHARACTERISTICS

| FIGURE NO. | 6 | 7 | 8 | 9 | 10 |
|---|---|---|---|---|---|
| AC secondary volts per 1,000 DC volts | 855 | 428 | 855 | 428 | 740 |
| DC volts output per 1,000 AC volts | 1,170 | 2,340 | 1,170 | 2,340 | 1,350 |
| Permissible DC output current above rating of single rectifier | 300% | 300% | 300% | 300% | 300% |
| Peak inverse voltage per leg per 1,000 DC volts | 2,090 | 1,050 | 2,090 | 1,050 | 1,050 |
| Ripple frequency | 3 f | 6 f | 3 f | 6 f | 6 f |
| Ripple voltage as percentage of DC output voltage | 18% | 4.2% | 18% | 4.2% | 4.2% |

(continued from page 5)

4-mfd. capacitors in a "brute force" filter are sufficient for exciter and audio equipment.

W8DLD uses the circuit of Fig. 7 with six GL-816 rectifiers and three 830-volt secondary transformers (Stancor PC-8301) in his 2,000-volt DC supply. A 300/600-volt dual output supply, using the circuit of Fig. 9, was made with three 120-to-240-volt, 50-watt step-down isolation transformers (Chicago SD-50). This powers his exciter and supplies screen voltage for a pair of GL-814 pentodes in his linear amplifier.

W8WFH uses a similar 300/600-volt power supply, plus a high voltage supply with the circuit of Fig. 9 and three 1,030-volt transformers (Stancor PC-8302) to obtain 2,500 volts DC to operate a pair of GL-4D21/4-125-A's in his linear amplifier.

Many amateurs will find the 3-phase alternator system to be the answer to their mobile power supply problems, just as W8DLD and W8WFH have found that it makes home-station results in signal reports possible from their mobile installation.

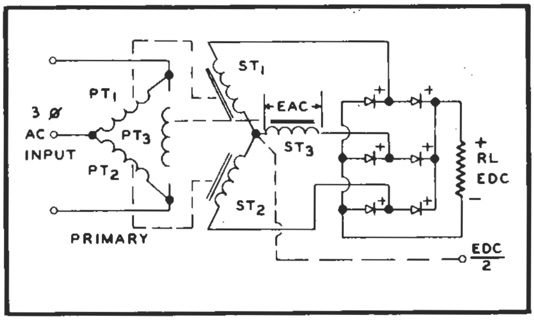

**FIG. 9. 3-PHASE STAR BRIDGE** rectifier circuit with silicon rectifiers. Approximately half to full DC output voltage can be obtained from the junction of the three high voltage windings, marked "$\frac{\text{EDC}}{2}$."

This half-voltage feature also can be obtained from the circuit in Fig. 7.

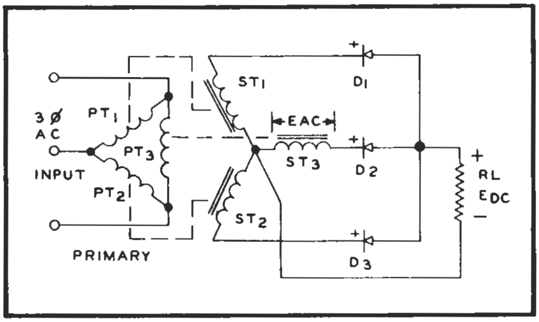

**FIG. 8. 3-PHASE STAR HALF WAVE** rectifier circuit with silicon rectifiers at $D_1$, $D_2$ and $D_3$. More than a single rectifier in each leg of the circuit will be necessary for output voltages above 200 volts. G-E type 1N1695 silicon rectifiers are suitable.

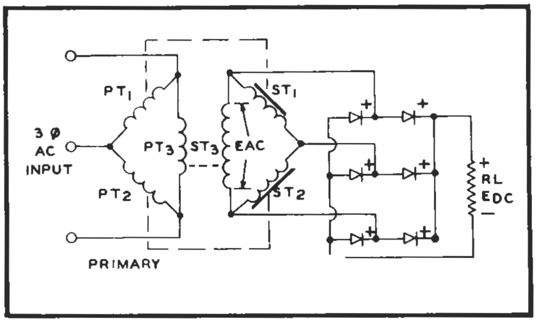

**FIG. 10. 3-PHASE DELTA BRIDGE** full wave rectifier circuit with silicon rectifiers. The "delta" connection of the high voltage windings reduces the DC output voltage to about 58 percent that of the star bridge circuit in Fig. 9, using the same transformers.

# Added Information on Three-Phase AC Mobile Power Supply Systems

## CONSTRUCTION DETAILS FOR 3-PHASE DISTRIBUTION STEPUP TRANSFORMER

An excellent, efficient 3-phase distribution transformer which will step up the 12-volt 3-phase AC output from automotive alternators to 120 volts AC can be constructed using home workshop facilities. This transformer has been designed to use three sets of identical standard "E" and "I" shaped laminations. The iron should preferably be of audio transformer quality for highest efficiency over the wide frequency range of 60 to 1000 cycles delivered by the alternator at various engine speeds.

The unusual design of the windings in "pies" was chosen for high efficiency over the wide frequency range which must be covered. Design data will not be given here, but is based on sound principles. Results achieved in several completed transformers verify the efficiency of this design.

Actually, three separate identical transformers are constructed, and then connected together physically with strips of angle stock, as shown in Fig. 1. The three primaries, and the three secondaries, are connected in a "Delta" circuit, as shown in this view.

FIGURE NO. 1.

COMPLETED TRANSFORMER WITH WINDINGS IMPREGNATED IN INSULATING VARNISH, READY FOR INSTALLATION IN VEHICLE.

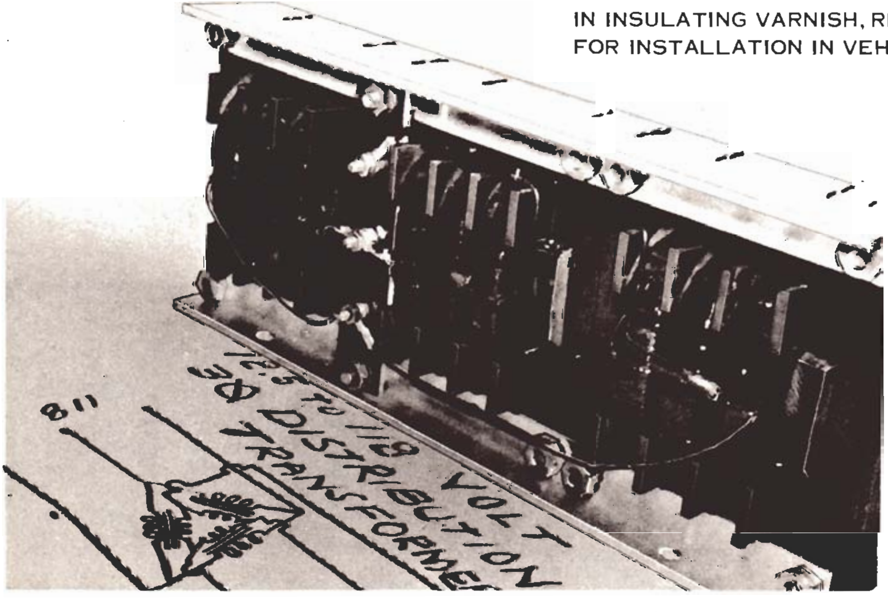

Figure No. 2 shows the winding mandrel. This one is made of brass, but could be made from plywood for the end pieces and clear maple for the split block. The core size will determine the exact size of this mandrel. This photo also shows one primary winding between two secondary windings. This is the way they look when taken off the mandrel. The three heavy wires out each side of the primary winding will later be cleaned and connected together. Obviously the secondary consists of two equal pies.

In Figure No. 3, the heavy wires on the primary have been connected and the windings wound with 1/2-inch wide varnished cambric tape. The core used is a 1-5/8 x 1-1/2 inch stack of good quality transformer iron. The wood spacers also show in the picture.

Note in Figure No. 4 that the primary has had connectors put on the heavy paralleled leads and the core has been assembled. Three of these transformers are then made into one unit with aluminum angle and 1/4-inch x 20 brass bolts. Also, the windings are connected in three phase delta as shown in Figure No. 1. The one foot long rule on top of the transformers shows the size.

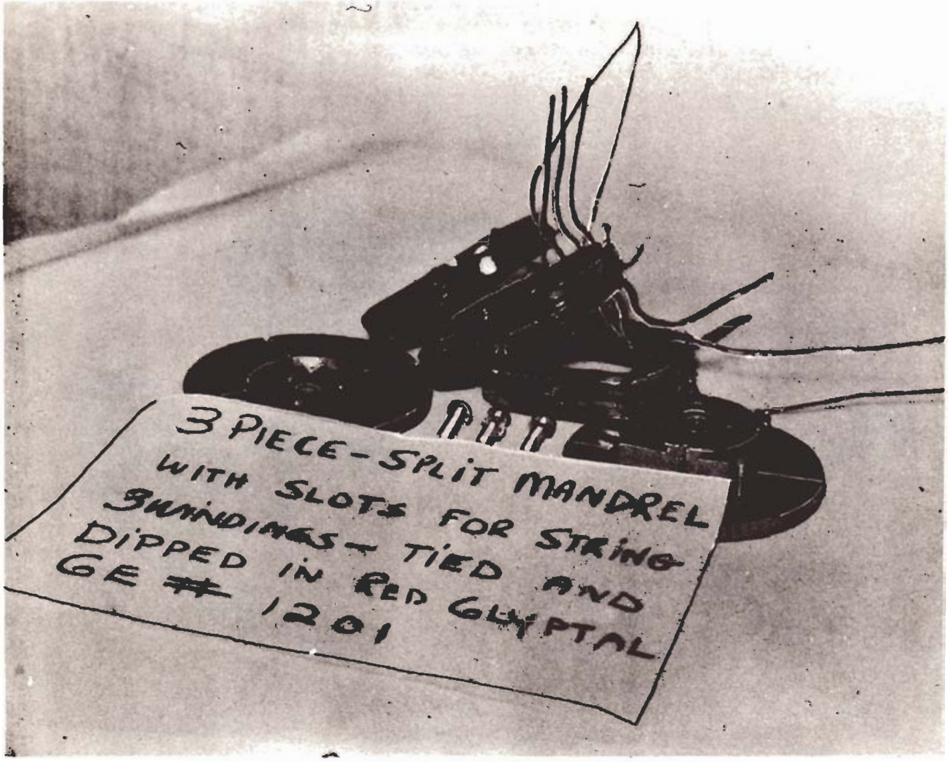

FIGURE NO. 2. VIEW OF WINDING MANDREL AND ONE SET OF COMPLETED COILS.

Material necessary:

1. Three identical transformer cores with "E" and "I" type laminations. Core area should be at least 2 1/4- square inches; this means a cross section of at least 1-1/2 x 1-1/2 inches. The core described measured 1-5/8 x 1-1/2 inches. Obviously the winding information is for this size core, but can be easily adapted to another size through simple arithmetic.

2. Two pounds of No. 14 Formex (type HF) magnet wire for primaries (three windings necessary). Four pounds of No. 16 Formex (type HF) magnet wire for secondary windings (six windings necessary).

3. 24 wood spacers (soft white pine) 1/8 x 5/8 x 3-1/8 inches.

4. 6 wood spacers (soft white pine) 1/8 x 1-1/2 x 3-1/8 inches.

5. One 4-inch diameter roll of 1/2-inch wide varnished cambric tape.

6. 36 feet of good lacing twine (Used to tie windings before removing from mandrel).

7. 1 Gal. No. 1201 GE red glyptal paint (or equivalent good insulating varnish).

8. 4 pieces aluminum angle to mount three transformers in a frame. My unit takes 12-1/4 inches long by 3/4 x 3/4 x 1/8 inches in cross section.

9. 10 BRASS bolts and nuts 2 x 1/4 x 20 inches.
2 BRASS bolts and nuts 2-1/2 x 1/4 x 20 inches (extra length to mount terminal strip).

10. Terminal strip for 3-phase 120 volt connections, 3/4 x 1 x 1/8 inches (GE textolite, or other insulating board).

11. 3 - 8 x 32 brass bolts, lock washers and six nuts to complete terminal strip.

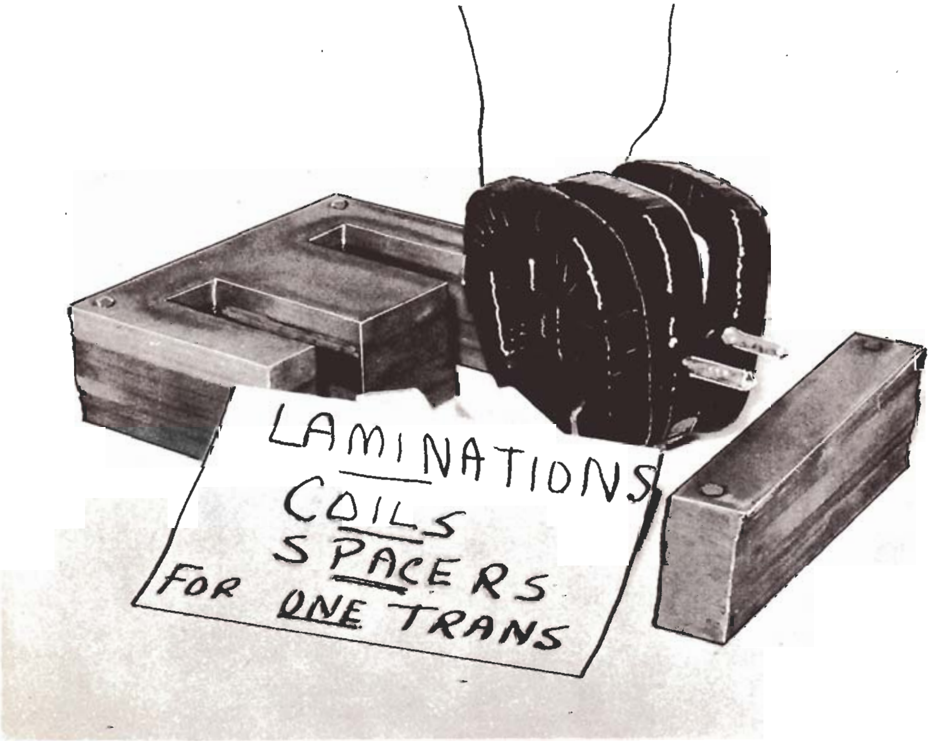

FIGURE NO. 3. VIEW SHOWING THE THREE SETS OF HEAVY WIRES FROM THE 12.6-VOLT PRIMARIES CONNECTED. SECONDARY LEADS SHOW AT TOP.

No terminal strip is necessary for primary of transformer. Connect three #8 flexible GE·flaminel wire leads permanently to connect transformer to alternator.

Primary (12.6 volt) 19 turns No. 14 Formex wire. Winding consists of 3 separate wires that are parallel connected after winding is complete. (Tied with string, dipped in 1201 red Glyptal, and taped with varnished cambric). Due to low voltage (12.6 volt) no insulation is used between layers or windings. Wind on first 19 turns, then second 19 turns, then third 19 turns. This completes winding. Try to keep each winding smooth so turns do not pile up or there will not be enough room to get third winding on mandrel.

Secondary: (120 volt) 94 turns No. 16 Formex wire. Wind on two 60 volt windings connected in series. Each half of the secondary has 94 turns or the total primary has 188 turns. Try to keep a smooth winding, layer by layer, or there will be trouble in getting the 94 turns on the mandrel. No insulation is used because the voltage (60 volts) is low and the 1201 red Glyptal and HF type wire give adequate insulation.

The finished transformer can be connected to 115 volt 60 cycle and allowed to run until temperature rises to 180 degrees F. and then given a final dip in 1201 Glyptal. Unless the 12.6 volt primary is loaded, it will take a couple of hours to get the transformer hot running from 115 volt 60 cycle power. Remember it is designed for a minimum of 100 cycles so will eventually get hot running on 60 cycles. You may prefer to heat the transformer in an oven if available.

This transformer bank must be mounted near the alternator. It will probably get wet. Do a good job on the dipping and insulation and you can forget it indefinitely.

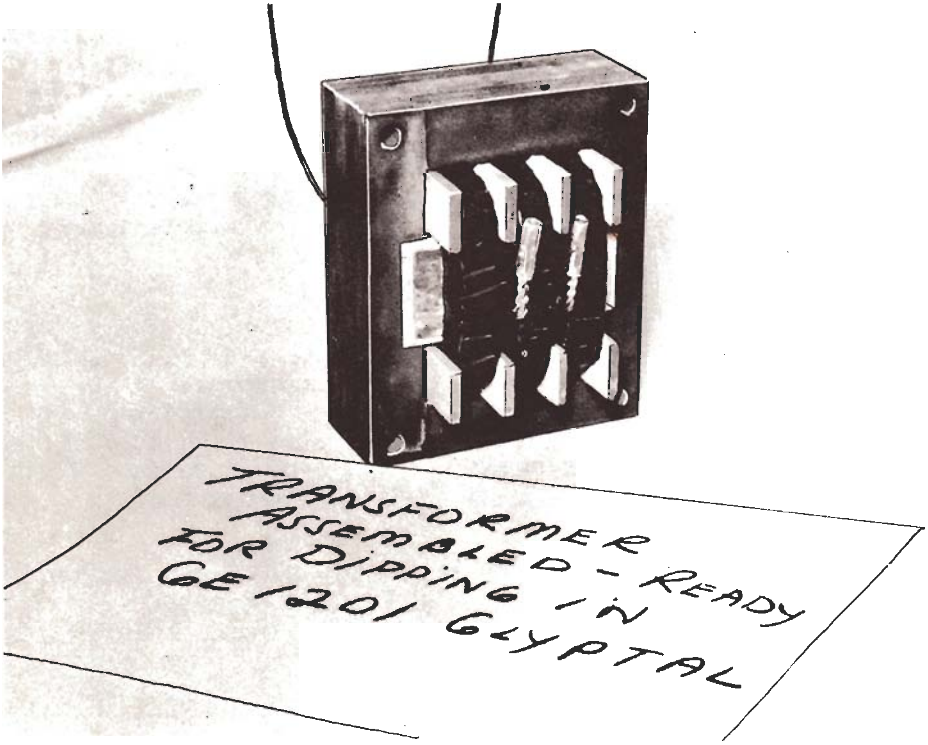

FIGURE NO. 4. ONE SECTION OF THE TRANSFORMER ASSEMBLED, READY FOR FINAL DIP IN INSULATING PAINT OR VARNISH.

It is also possible to use this same transformer design to wind a 3-phase transformer with higher voltage secondaries, rather than the 120-volt secondaries described here. Windings which will deliver several hundred volts can be substituted, thus making it possible to step up the 12-volt alternator output directly to high voltage. When the three transformer secondaries are connected in a 3-phase star fashion to a suitable rectifier, as shown in Figures 7 and 9 on pages 6 and 7 of the July-August, 1960 issue, the DC output voltage from the rectifier will be 2.34 times the voltage across one secondary winding.

For example, if 1,000 volts DC are required, each secondary may be wound to deliver 430 volts AC. Based on the 120-volt winding having two 94-turn coils, a 430 volt winding would have two coils of 340 turns each, or a total of 680 turns on each secondary. This wire size would be smaller, of course, since the output current requirements would be much lower than that of the 120-volt windings. Wire sizes from No. 20 to No. 24 would be chosen. Additional insulation would have to be used around the secondary, because of the higher voltages present.

## HINTS AND KINKS

Before mounting anything in the car, get the alternator installed and tested. Complete installation kits are available for most cars. If one is not made for your car - trade the car! Once the alternator installation is complete and the regulator is working properly, holding the battery at 13.5 to 14.00 terminal volts, install the distribution transformer. Connect the primary solidly to the alternator terminals. Do not use fuses or a relay switch in this high current low voltage circuit. The alternator is belt driven so the protection is there if a direct short circuit happens.

Test the transformer regulation in this manner: Get six porcelain lamp sockets, a double pole single throw knife switch, three 60 watt lamps and three 200 watt lamps. Connect as shown in Figure No. 5 on page 5 of the July-August issue. The three 60 watt lamps present a balanced 180 watt load to the alternator. They represent the small load required by your equipment in the "stand-by" condition. Measure the voltage. It should be approximately 120 volts per phase.

Now close the switch and throw on the 600 watt load. Read the voltage. It should be at least 110 volts. This represents a "voice peak" when the transmitter is drawing full load. Try this test at different engine speeds. The carburetor idle adjustment must be set so the voltage will not fall below 100 volts at slowest speed. You may not like this with an automatic transmission but most cars creep a little anyway so yours will creep a bit more. This adjustment is made at full load of 780 watts. (600 180). I refer to the 100 volt idling limit. 110 volts should be just a few RPM's faster.

Summarizing the installation and operation of 3-phase AC power systems in automobiles for more efficient operation of mobile radio equipment, remember the following points:

1. The alternator manufacturer, such as Leece-Neville, puts a rating on the complete system he sells. You buy a 50-ampere, 12 volt system or 100 ampere, 6 volt system. On the surface this looks like the alternator is capable of supplying 600 watts at the battery terminals by way of a rectifier. This is all true. What is left out is that the rectifier carries an exact maximum current limit. It is responsible for the 600 watt limitation. The alternator is capable of delivering much more power. Years of field use indicate the rating of the alternator alone to be well above one KVA. This is under summer 85 degree F. temperature with the normal cooling in a car in motion.
2. Idling speed of an alternator in ordinary car usage is 100 or more cycles. Maximum frequency may go as high as 1000 cycles.
3. Three phase full wave rectification has only 5% ripple before filtering. Ripple frequency from a 3 phase full wave rectifier is six times the AC supply frequency.
4. Filtering a 3 phase full wave DC power supply is extremely easy because the ripple is always 6 times the AC cycle input frequency. (See statement #3) A condenser of 2 to 6 MF is usually adequate when supplying an RF stage. For audio stages a small 4 Henry choke is desirable along with two 4MF condensers in a "brute force" filter.
5. Modern 115 volt 60 cycle transformers work well on 100 to 1000 cycles. Ratings can be exceeded considerably using a minimum of 100 cycles on a 60 cycle transformer design.

**Heavy duty filament transformers can be used as step up transformers for high voltage power supplies operated directly from the output of a 12-volt, 3-phase alternator without the distribution transformer described in this bulletin. Simply take three 6.3-volt filament transformers and connect these windings in delta across the alternator supply. Then, each 115-volt secondary can be fed into a star bridge rectifier circuit, as shown on page 7 of the July-August, 1960 issue. The DC output voltage will be 2.34 times the 230-volt output of one secondary, or about 700 volts. Or, doubler type rectifier circuits could be used to obtain 1,000 to 1,400 volts DC.**

## Added Uses for Mobile Alternators . . .

The 3-phase AC alternator system described in the July-August, 1960 issue is a good source of emergency power, according to W8DLD. As long as the load on the alternator is closely balanced, a kilowatt of power is available for lighting, running appliances, and even AC-powered communication equipment in an emergency. For the latter application, it is best to hold the engine speed below 1,000 r.p.m. so that the alternator frequency does not go above 200 cycles. Transformers in some equipment designed for 60-cycle operation may not operate efficiently on frequencies above this.

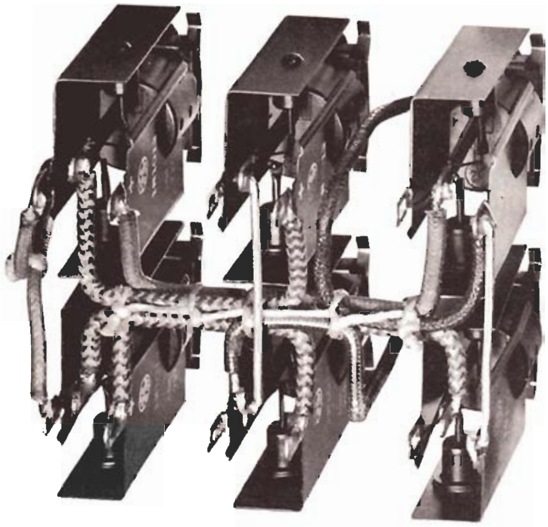

ABOVE — Top view of six G-E type 1N1016 two-section germanium TV rectifiers, assembled into bridge rectifier unit which will handle up to 750 Volts AC at 400 milliamperes DC output current.

BELOW — Bottom view of typical dual voltage power supply of the type described on pages VIII-10 to VIII-15.