HAM TIPS

RCA

A PUBLICATION OF THE RCA TUBE DIVISION

Vol. XV, No. 1

May, 1955

144-Megacycle Transmitter

72-Watts Input on 144 Mc with an RCA-5894

By R. M. Mendelson,* W2OKO

The appearance of a new tube often prompts the adventurous ham to re-appraise his equipment with a critical eye. W2OKO looked over the specifications for the new RCA-5894, a high-efficiency version of the 829, and found it was time he built an up-to-date 144-Mc rig. The result is a transmitter that takes advantage of the best features of this high-frequency twin beam power tube. Ready for 72 watts of modulated input, the circuit described below incorporates stable VFO tuning, broad-band multipliers for a minimum of tuning controls, a high-efficiency tank circuit, and coaxial output with antenna switching.

Since attention to wiring and construction detail often spells the difference between R3 and R5 at 144 Mc, more than usual "how-to" information will be supplied for this rig. The transmitter will be described in two parts. Part I contains a description of the set, the circuit diagram and parts list, and advice on wiring and construction for those who want to get off to an early start. Adjustment and operation will be described in Part II.

The RCA-5894, a twin beam power tube designed to operate at frequencies up to 400 or 500 Mc, offers many advantages in a modern 144-Mc rig. Since a survey of recent literature disclosed little information on how to capitalize on the tube's possibilities, the transmitter described in this article was developed.

The VFO and multiplier tubes are all well-known ham types. A 5894 is used for the final stage; this tube has balanced structure with low interelectrode capacitances and low cathode inductance. The 5894 is internally neutralized, eliminating all need for external neutralizing circuits. These features, plus the 5894's low rf losses and high power sensitivity, make it an excellent choice for operation with a full 'phone input of 72 watts at 144 Mc.

The complete schematic diagram is shown in Figure 3. The VFO operates in the 8-Mc range, using a 6AU6 in a conventional Clapp oscillator and feeding into a 5763 buffer stage. A 5763 multiplier stage triples to 24 Mc. By means of switch S_1, this stage may also be used as a crystal oscillator for scheduled contacts, net operations, etc. A second 5763 multiplier doubles to 48 Mc to feed a pair of 5763's in a push-pull tripler that drives the final.

The buffer and the two single-tube multi-

---

* RCA Tube Division, Harrison, N. J.

pliers use slug-tuned coils in self-resonant plate circuits. When the coils are peaked for 146-Mc operation, they give adequate drive from 144 to 148 Mc. The push-pull tripler, capacitively coupled to the final, also provides ample, well-balanced drive over the entire band. Screen-voltage divider R_{17} controls the amount of drive, while R_{18} prevents accidental lowering of drive below a safe value.

To prevent a parasitic oscillation in the final, it was necessary to use a series-tuned screen bypass circuit formed by C_{29} and the internal tube screen-lead inductance. R_{21} serves a dual purpose. First, it acts as a screen-voltage dropping resistor. Since it is wire-wound, however, it also serves as an rf choke at 144 Mc. Its location is important and is discussed under "Construction."

The efficiency of the final circuit stems from the 5894 and from its tank design. This type of design was described in *Electronics,* May, 1947 (p. 130), and sample calculations were given for 144 Mc. Referring to Figure 6, note that the basic circuit is a pair of parallel lines surrounded by a large copper shield. The parallel lines terminate in a copper disk. Separated from this disk by a mica insulator is another copper disk which forms the "bottom" of the shield. The shield prevents radiation from the tank lines and raises the circuit Q considerably.

Loading is varied, and output is taken by means of a movable hairpin loop coupled to the shorted end of the tank. As can be seen from Figure 3, the shield disk and mica insulation also act as an rf bypass capacitor (C_{32}) for this end of the tank line. Dimensions of the components are fairly critical. The parts can be machined easily, however. They can also be made with hand tools if proper care is exercised. Details are included under "Construction."

Because of the push-pull operation, it is essential that the plate circuits of the 5894 be balanced if both plates are to run cool. Since a balanced antenna coupling is indicated, the hairpin loop should not be used to couple directly to a coaxial line. To make the coupling, a conventional antenna tuner cut for 144 Mc (*QST*, January, 1952, p. 50) is used in reverse. For feeding 50-ohm coaxial line, the input taps on the coil will be approximately one-half turn in from each end; however, they are best located experimentally—as described under "Operation."

Transmitter Layout

As shown in the panel layout, tuning controls are necessary only for the last multiplier plate and the final plate, and are located just below the grid-current and plate-current meters. From left to right across the bottom row are the final excitation control, the crystal-VFO selector, crystal sockets, the filament switch, and antenna loading and tuning controls. Filament and high-voltage pilots and a fuse holder complete the lower level. The VFO tuning knob, calibration dial, and band-set adjuster are in the upper right corner of the panel.

The rig is built on a 17″ x 13″ x 3″ steel chassis bolted to a 19″ x 8 ¾″ steel panel. Because of the frequency multiplication of 18 times from VFO to final, it is best for good stability to use steel here and provide strong panel-to-chassis bolting.

Figure 1. Panel view of the 144-Mc transmitter. VFO bandset control is directly above the center of the VFO dial.

The VFO and buffer stages are mounted on the left side of a steel box behind the right end of the panel. The first two multiplier stages are on the left of the chassis toward the front. The tripler-driver is located back of the doubler, on a sub-chassis and in line with the socket of the final tube. This arrangement allows short coupling leads to the final. Its symmetry also helps to keep the final grid circuit balanced. The 5894 is mounted horizontally, allowing easy connection to the plate tank circuit and adequate ventilation around the tube. This method also keeps heat from getting to the tuned lines where it might affect tuning stability. Tripler and final tuning controls are brought to panel mounts by simple pulley arrangements, as shown in Figure 5.

Antenna link coupling is made at the cold end of the tank lines and is carried by two feed-through bushings below the chassis to the antenna tuner.

The voltage-regulator tube for VFO plate and screen voltage is at the back of the chassis. On the chassis back wall are the antenna and receiver coax connectors and the power input plug.

Construction

If the usual precautions against feedback are observed, no difficulties should be encountered in the construction of this transmitter. Keep all rf leads as short as possible. Only dc and filament leads may be cabled; even on these, adequate rf bypassing should be used close to the tube sockets.

The VFO box is held to the panel with 12 screws. It has no rigid connection to the chassis. Added strength is provided by the use of 12 more screws to fasten the back plate to the box. Heat from the tubes is dissipated outside the box, because only the cold components and the rf tuned circuit are placed inside. Note that a bus-bar is used for all VFO and buffer ground connections. The bus-bar is grounded to the chassis only at the tuning capacitor rotor (C_2). Design of this sort has proved valuable in obtaining a steady VFO frequency. (See VFO described in HAM TIPS, December, 1953.)

The VFO coil is made of 2″ B & W coil stock, chosen for strength and high Q. The

Figure 2. Top view. Note expansion loops in plate leads of the RCA-5894. The two pulley assemblies can also be seen.

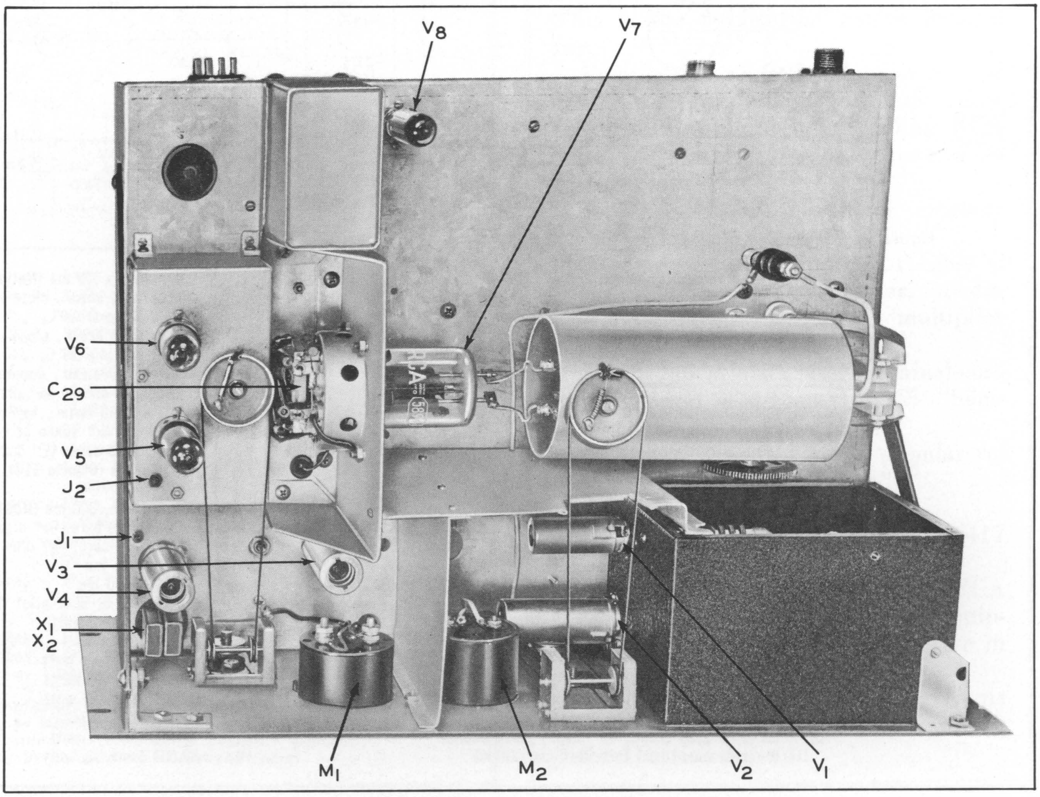

coil is best mounted by gluing to a piece of Lucite, using any good plastic cement between the Lucite and the coil's plastic frame. This larger Lucite piece may then be bolted to the front panel on 1″ porcelain standoffs. Keep the coil as far as possible from the cabinet walls. The tuning capacitor, which should be of the two-bearing type, is also bolted to the front panel. In this way the lead from coil to condenser is kept short; more important, the capacitor and coil are kept rigid with respect to each other.

To insure good shielding, paint should be scraped from the back of the panel where the VFO box makes contact. Similarly, scrape the paint from the area of contact between the box and its back cover.

Wiring of the multipliers up to the push-pull tripler requires no comment except to repeat the advisability of shoft rf leads.

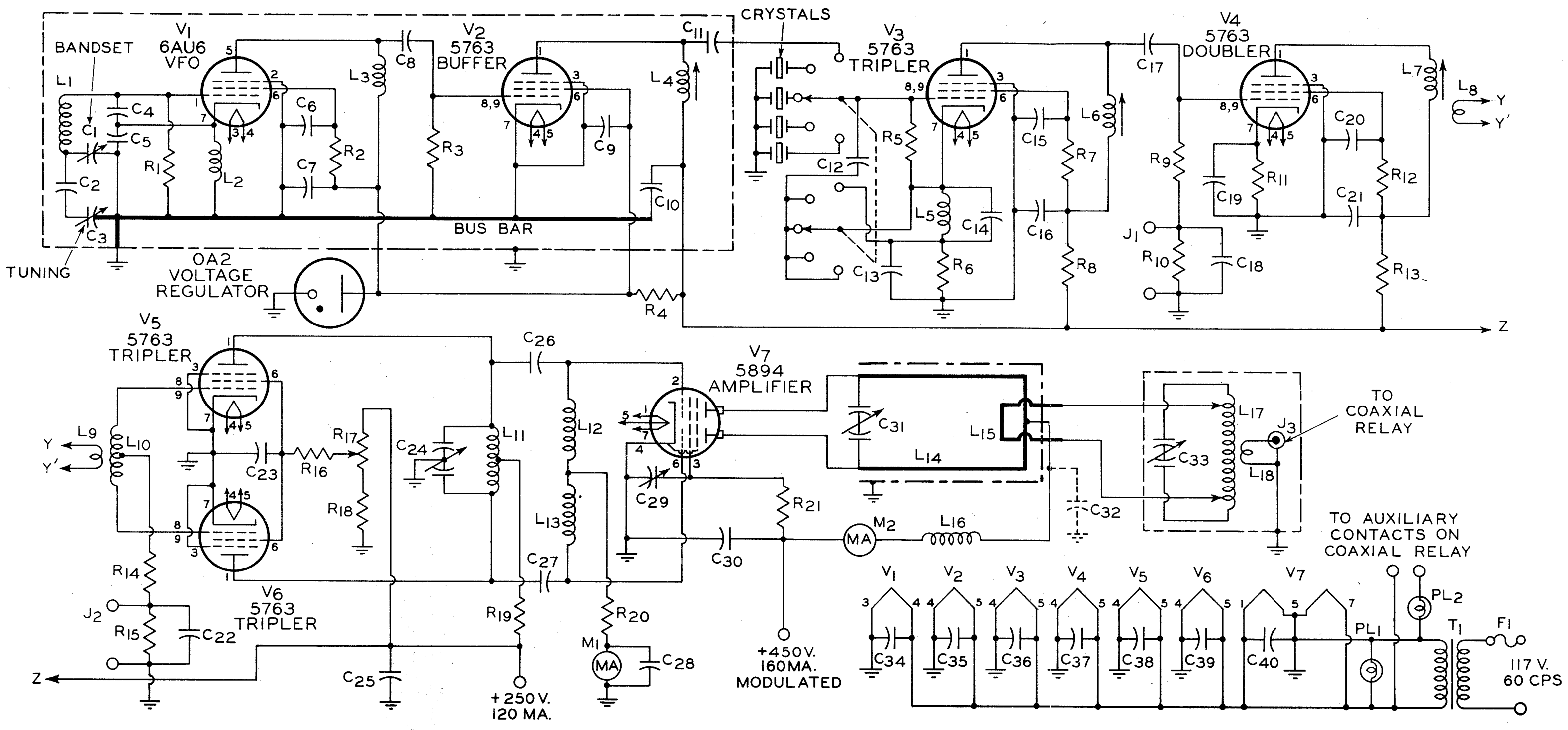

Figure 3. Schematic diagram and parts list.

C_1	50 μμf variable (Hammarlund APC-50)
C_2	5 μμf ceramic, zero temp. coeff. (Erie NPOK-050)
C_3	15 μμf variable, dual bearing (National SEU-15)
$C_{4,5}$	500 μμf silver mica (El-Menco CM15-E501J)
$C_{6,7,9,10,13,15,}$ $C_{16,34,35,36,40}$	0.01 μf ceramic (Centralab CRL D6-103)
$C_{8,17}$	50 μμf ceramic (Erie GP1K-500)
C_{11}	100 μμf ceramic (Erie GP1K-101)
C_{12}	10 μμf ceramic (Erie GP1K-100)
C_{14}	150 μμf ceramic (Centralab CRL D6-151)
$C_{18,19,20,21,22,23}$ $C_{28,37,38,39,41}$	0.001 μf ceramic (Centralab CRL D6-102)
$C_{24,31}$	10 μμf per section butterfly (Hammarlund BFC-12)
C_{25}	2 μf oil, 600 WVDC (Cornell Dubilier TJU 6020)
$C_{26,27}$	20 μμf ceramic (Erie GP1K-200)
C_{29}	7-45 μμf variable ceramic disk (Erie TS2A-7)
C_{30}	0.002 μf mica, 2500 WVDC (Cornell Dubilier Type 9L)
C_{32}	See text
C_{33}	15 μμf per section variable (Hammarlund HFD 15X)
F_1	Fuse, 3AG, 1 amp.
$J_{1,2}$	Insulated phone tip jacks
J_3	Output jack to coaxial relay
L_1	20 turns #16, 2″ diam., 2″ long (B&W 3907 coil stock)
$L_{2,3}$	RFC, 2.5 mh, 125 ma (National R-100U)
L_4	23 turns #26 enam., ½″ diam., close-wound (on slug-tuned coil form National XR-50)
L_5	RFC, 2.5 mh, 125 ma (National R-100)
L_6	7 turns #26 enam., close-wound on same type form as L_4
L_7	4 turns #26 enam., close-wound on same type form as L_4
L_8	2 turns #16 enam., coupled to L_7
L_9	1 turn #16 enam., ¾″ diam.
L_{10}	20 turns #16 enam., ½″ diam., spaced wire diam., plus ¼″ space at center for L_9
L_{11}	2 turns #16 bare, ½″ diam., spaced ⅛″
$L_{12,13}$	RFC, 1.8 μh (Ohmite Z144)
$L_{14,15}$	See text
L_{16}	RFC, 2.5 mh, 300 ma (National R-300ST)
L_{17}	5 turns #16 bare, ⅝″ diam., spaced ⅛″
L_{18}	1 turn #16 bare, ¾″ diam.
M_1	Meter, 0-15 ma
M_2	Meter, 0-500 ma
$PL_{1,2}$	6-8 v, #40 or #47 pilot lights
R_1	47,000 ohms, 1 watt
$R_{2,8,13}$	1,000 ohms, 1 watt
R_3	50,000 ohms, ½ watt
R_4	3,000 ohms, 10 watts
R_5	68,000 ohms, ½ watt
$R_{6,11}$	330 ohms, ½ watt
$R_{7,12}$	12,000 ohms, 1 watt
R_9	82,000 ohms, ½ watt
$R_{10,15}$	1,000 ohms, ½ watt
R_{14}	33,000 ohms, ½ watt
R_{16}	8,000 ohms, 1 watt
R_{17}	20,000 ohms, wire-wound variable, 2 watts
R_{18}	20,000 ohms, 2 watts
R_{19}	100 ohms, 1 watt
R_{20}	10,000 ohms, 1 watt
R_{21}	15,000 ohms, wire-wound, 20 watts
S_1	DP 5-position ceramic rotary switch (Centralab 2505)
T_1	6.3 v, 10 amp (Stancor P6308)
	Miscellaneous
Chassis	17″ x 13″ x 3″ steel (ParMetal B-4536 or C-4536)
Panel	19″ x 8¾″ x ⅛″ steel (ParMetal 6604 or G6604)
Sub-chassis	5″ x 3″ x 2″ (Open-side half of Flexi-mount ICA-29341, or bend from aluminum stock)
VFO shield box	6″ x 5″ x 4″ steel (ICA-3812)
Ant. tuner box	4″ x 4″ x 2″ aluminum (ICA-29810)
Coaxial relay	(Advance CB/1C2C/115VA)

Note: Manufacturer's names and part numbers are given only to identify components used in this transmitter. Equivalent components by other manufacturers may be substituted wherever desired.

Link coupling is used to the grids of the tripler because of its location. Feed-through bushings fix link coil L_6 and allow the tripler sub-chassis to be lowered into place after both the sub-chassis and socket wiring for the final have been completed.

Filament, plate, and screen leads from the sub-chassis are fed through a grommet and wired later to their proper points under the chassis. The grid coil is broad-tuned and is adjusted when the transmitter is put into operation. For reduced lead inductance, it is advisable to use 5/16″-wide copper ribbon for the plate-to-tank leads. The use of tube shields on this stage is not recommended since the loss of rf power through the added plate-ground capacitance will be excessive.

In wiring the final socket (which should contain ventilating holes and be shielded and sunken), note that the screen lead and grid return are fed through the chassis by bushings. Copper ribbon is used from the screen to its feed-through. The screen bypass trimmer should be mounted across the socket to the point at which the heater and cathode are grounded. Place it at a slight tilt so that it may be tuned from above. Under the chassis, the screen dropping resistor is mounted directly on the feed-through bushing and is bypassed by a high-voltage mica capacitor (C_{30}) at the B + end. The grid-

HAM SPECIAL

Building a new rig? Modernizing an old one? Got a tube problem? If the answer to any or all of these questions is yes, see your RCA tube distributor and ask him for the new RCA *Headliners for Hams* (Form HAM-103B). This is the publication you're looking for.

Completely revised, *Headliners for Hams* is jam-packed with up-to-date technical information on leading RCA tubes for amateur service. Some of its features are:

1. Tube line-up chart for amateur transmitters.
2. Operating conditions for Class C amplifier and oscillator, modulator, and frequency multiplier service.
3. Technical data and terminal-connection diagrams for 45 "ham-preference" tube types.
4. Latest ham ratings on popular receiving tube types.
5. Single side-band data.
6. Data on new tubes 6524 and 6417 for mobile use.
7. Technical information about RCA oscillograph tubes for test equipment and camera tubes for use in amateur telecasting.

In short, RCA *Headliners for Hams* was published and designed by the RCA Tube Division for you.

bias resistor is mounted between its feedthrough and a stand-off, from which a lead runs to the grid meter. Again, 5/16″ flexible copper ribbon, having a U-bend to take up thermal expansion, is used for plate-to-tank leads. This construction prevents the plate-terminal seals from being subjected to any strain.

The shields shown in the top views of the chassis keep any final rf away from earlier stages. They also separate the final grid and plate meters. These shields were installed during the design trouble-shooting of the rig but may not be necessary.

Depending on available facilities, some ingenuity may be required to build the final tank. The disks may be cut easily if a drill press and fly cutter are used; if not, a hack saw and file will do an acceptable job. The copper shield tubing may be obtained from any large plumbing-supply house. If the dimensions shown are used, the tank will be right on frequency.

In this tank, a spacer of laminated mica and fiber glass was used. Regular mica may be substituted, however. The thickness should be at least 1/16″ to prevent arc-over but is not critical otherwise. Teflon sheet of at least the same thickness also may be used. Teflon was used here to hold the antenna coupling loop in alignment. Lucite may also prove satisfactory. In any event, these fittings should be kept snug to hold their setting.

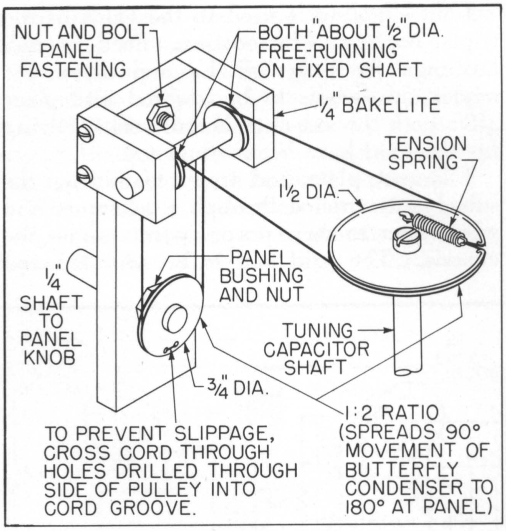

Figure 5. Suggested construction for the two pulley drives.

In the transmitter shown, a mechanical linkage is used to vary the antenna loading. This linkage was put in before final design was reached and proved to be an unnecessary refinement. Once set, the link will

Figure 4. Bottom view, showing arrangement of components for shortest rf leads.

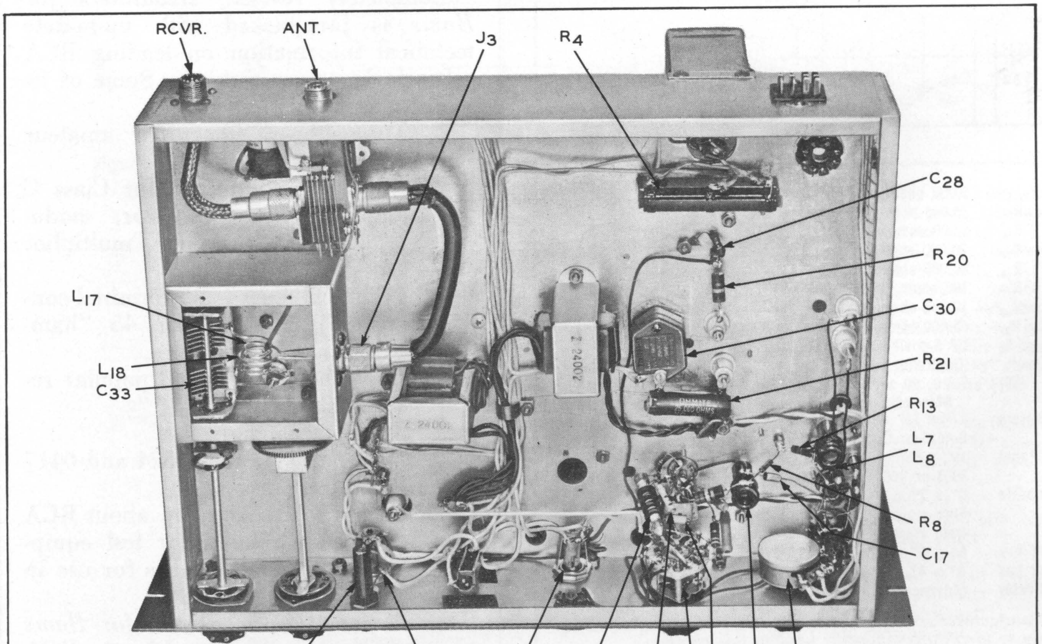

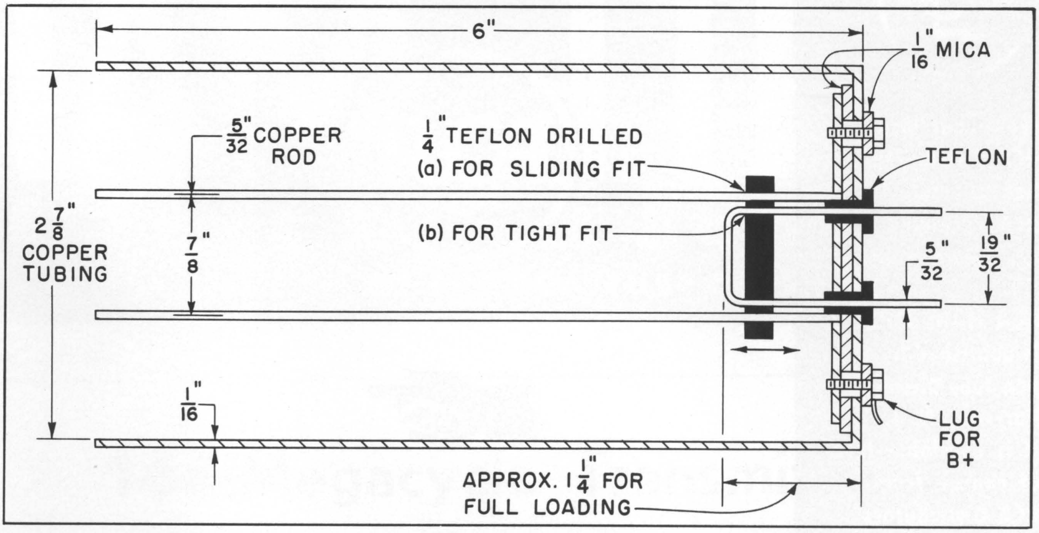

Figure 6. Construction details for the 144-Mc final tank assembly.

not have to be moved very often—even with relatively large frequency changes.

Be sure the plate tuning capacitor (mounted just inside the shield tubing) is insulated from ground, but that the shield itself is well grounded for rf by a 1″ copper ribbon at the plate end. These precautions, together with the system of screen bypassing used, will prevent a 200-Mc parasitic oscillation that may otherwise appear.

The antenna tuner is straightforward except that its capacitor rotor is also insulated from ground. Use ½″ stand-offs and an insulated shaft coupling. Keep this circuit well shielded. Because the rf fields at the tuner are strong, complete enclosure is essential to prevent possible TVI and feedback to earlier stages.

Figure 7. Detail view showing arrangement of components on the sub-chassis and the final socket.

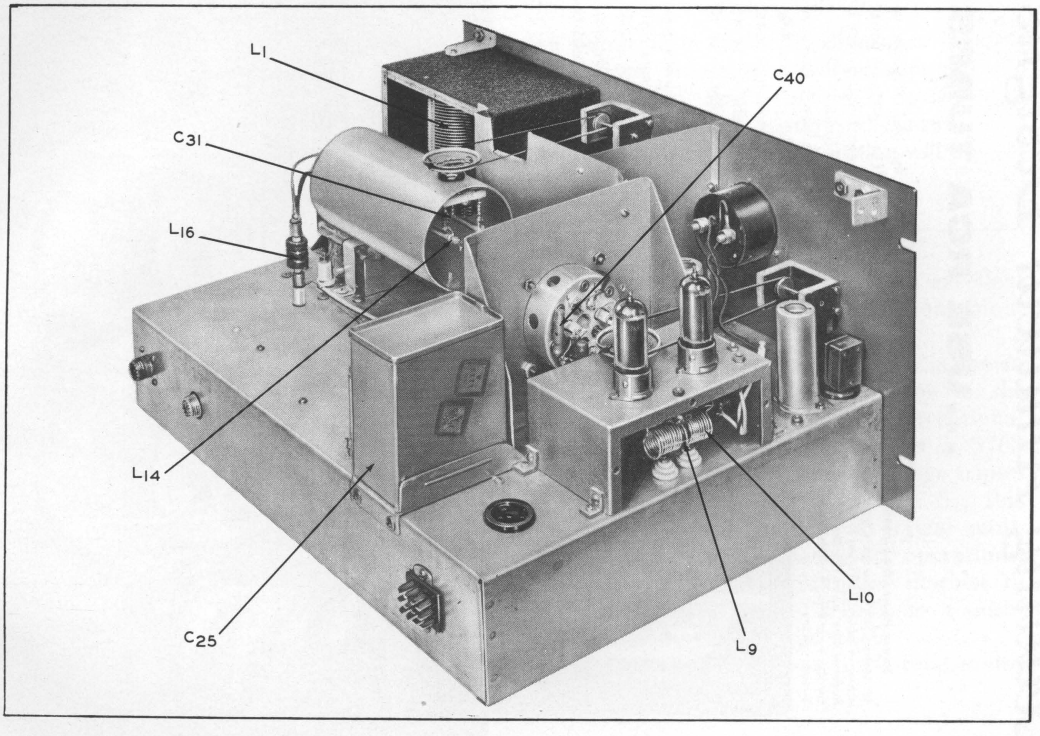

Leading Amateur Designs

...USE RCA TUBES

Beam Power RCA-6146

90 watts ICAS input on CW; 67.5 watts on 'phone. Full input to 60 Mc. Reduced input up to 175 Mc. For example, it handles 48 watts input on 2-meter 'phone.

For example, look at the final amplifier of Johnson's Viking II. Two RCA-6146 beam power tubes in parallel deliver a signal wallop that is making history in the amateur bands.

Here's why this well-known power type is so popular: RCA-6146 delivers full power at relatively low plate voltage. RCA-6146 has high power sensitivity (a 6AQ5 doubler/buffer drives it). RCA-6146 operates with high efficiency – on all bands of this transmitter.

Preferred by radio amateurs—*and by commercial transmitter designers*—RCA high-perveance beam power tubes and triodes are available in a wide choice of input ratings. Your RCA Tube Distributor handles the entire line. For tube technical data, write RCA, Commercial Engineering, Section Harrison, New Jersey.

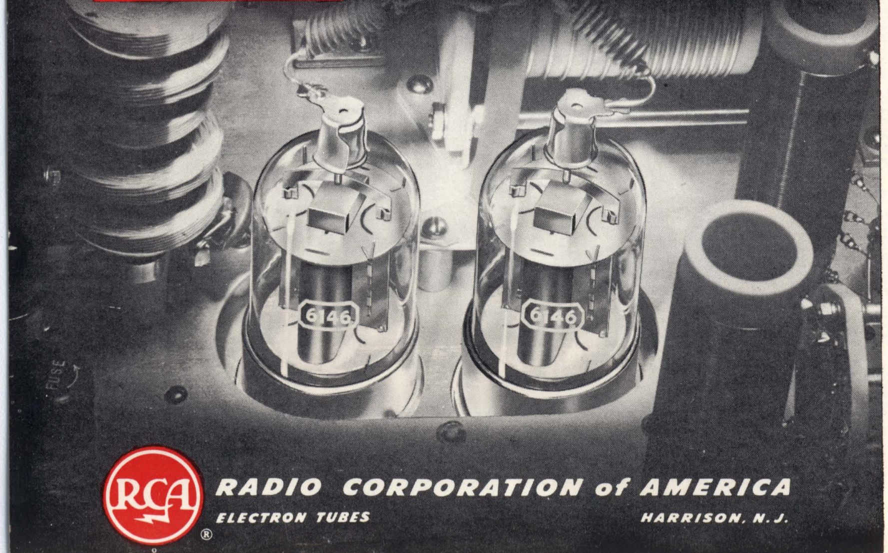

Close-up view of the RCA-6146's in parallel—in the final amplifier of the Johnson Viking II.

RADIO CORPORATION of AMERICA
ELECTRON TUBES **HARRISON, N. J.**

Devices and arrangements shown or described herein may use patents of RCA or others. Information contained herein is furnished without responsibility by RCA for its use and without prejudice to RCA's patent rights.

From your local RCA distributor, headquarters for RCA receiving and power tubes.

RCA HAM TIPS
is published by the RCA Tube Division, Harrison, N. J. It is available free of charge from RCA Distributors

•

Harvey Slovik, Editor
Charles Howard, W2QIH
Technical Editor

FORM 3547 REQUESTED

WHEN MAILING
PLACE POSTAGE HERE